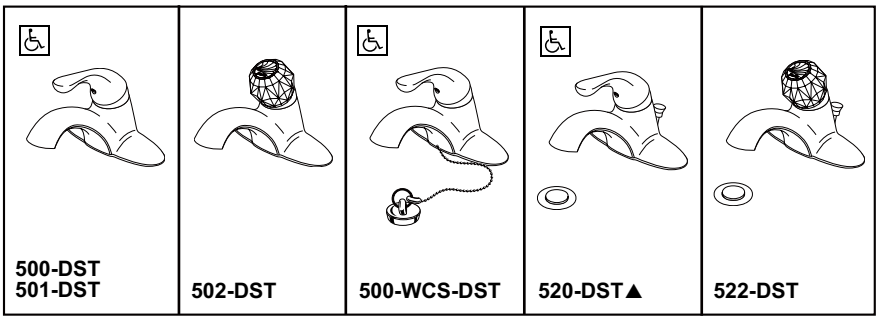

Submitted Model No.: _____

Specific Features: _____

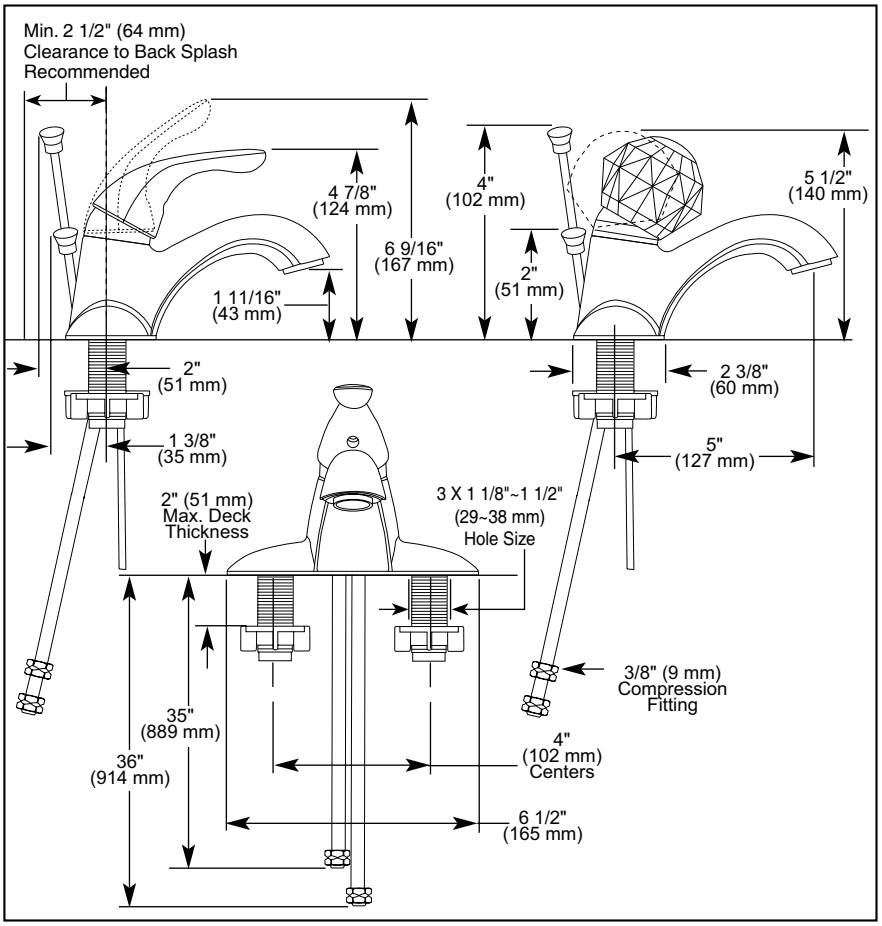

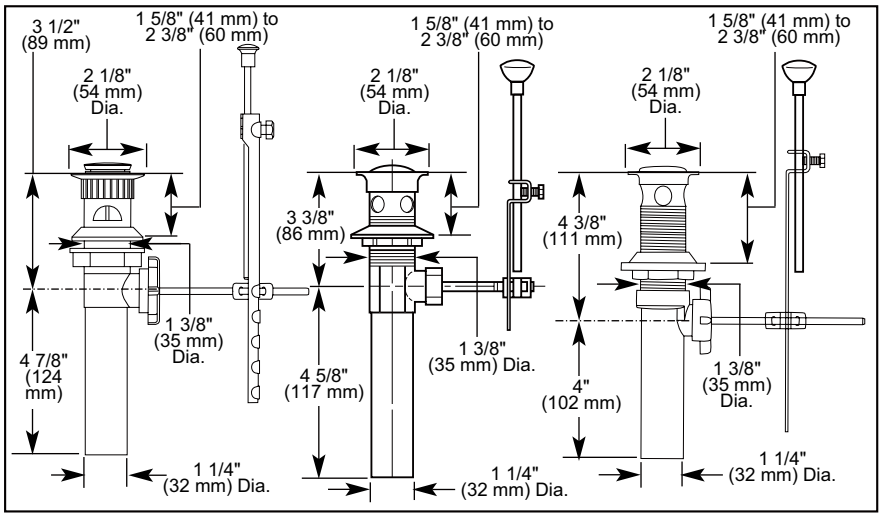

▲ Designate Proper Finish Suffix

Delta reserves the right (1) to make changes in specifications and materials, and (2) to change or discontinue models, both without notice or obligation. Dimensions are for reference only. See current full-line price book or www.specselect.com for finish options and product availability.

DSP-L-500-DST Rev. B

LAVATORY FAUCETS

- Classic Series
- Diamond™ Seal Technology
- Single Handle Deck Mount
- 3 Hole Sink Applications
- 4" Centerset

STANDARD SPECIFICATIONS:

- 4" (102 mm) centerset.
- 5" (127 mm) long spout.
- Lever and knob handle. Control mechanism is the diamond embedded ceramic disc cartridge.
- Control handle shall return to neutral position when valve is turned off.
- 3/8· O.D. straight, staggered pex supply tubes - 35" (889 mm) and 36" (914 mm) long.
- Models with suffix "MPU" have metal drain with pop-up type fitting with plated flange and stopper.
- Models with suffix "PPU" have plastic pop-up type fitting with plated flange and stopper.
- Models with no suffix have brass drain w/plastic tailpiece.
- Models have a maximum 1.5 gpm flowrate @ 60 PSI.

WARRANTY

- Lifetime Faucet and Finish Limited Warranty to the original consumer purchaser to be free from defects in material and workmanship.
- 5 Year Limited Warranty for usage in all industrial, commercial and business applications.

COMPLIES WITH:

- ASME A112.18.1 / CSAB125.1
- ASME A112.18.2 / CSAB125.2
- Indicates ADA compliance to ICC/ANSI A117.1
- IAPMO Listed
- CSA Certified
- EPA Water Sense

Verified compliant with .25% weighted average Pb content regulations

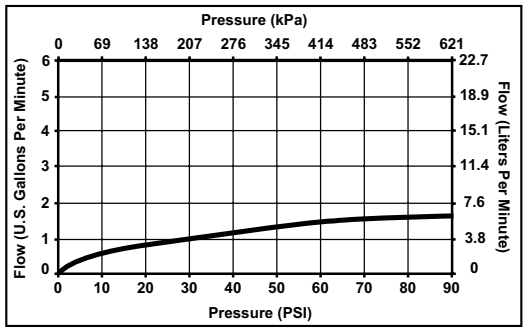

DELTA FAUCET COMPANY
55 E. 111th Street, Indianapolis, Indiana 46280
395 Matheson Blvd. E., Mississauga, ON L4Z 2H2
© 2009 Masco Corporation of Indiana