GERBER

www.gerberonline.com

Maxwell® 1.6 GPF Round Front Toilet

14″ Rough-in

Features:

☐ MX-21-404

- Vitreous china
- Combination bowl and tank
- 3″ Flush valve
- 14″ Rough-in
- Round Front bowl
- Dual-fed siphon jet action bowl (no splashing)
- 2″ Fully Glazed trapway for effective waste removal
- Color matched metal tank lever
- 6 point tank to bowl connection for tank stability
- Sanitary bead for easy cleaning
- Color matched Bolt caps included
- Toilet seat not included

Technical Information:

Included Components:

☐ Combination	MX-21-404
☐ Bowl	21-952
☐ Tank	MX-28-994

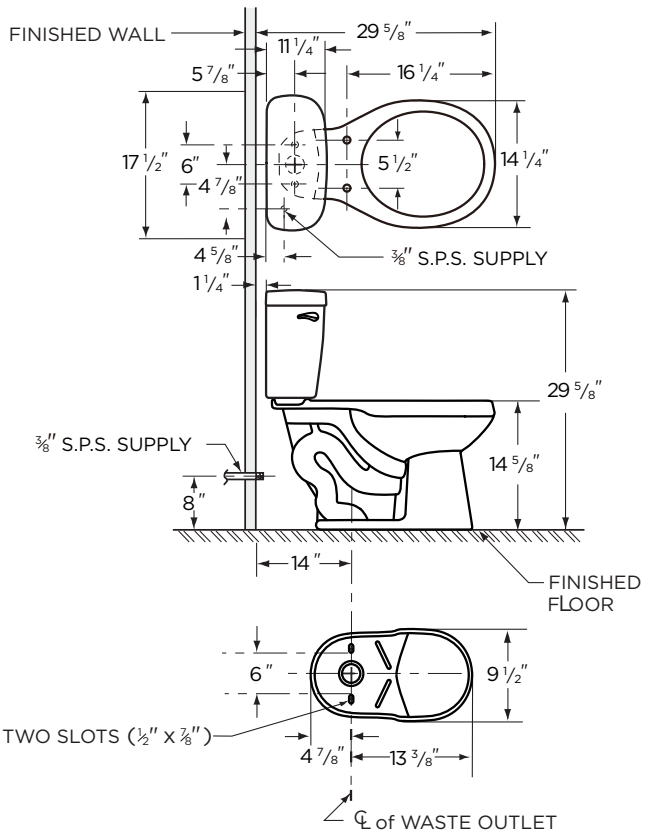

Fixtures:

Configuration	Two-piece, round front
Water per Flush	1.6 gpf (6 lpf)
Rough-In	14″
Height	29 5/8″
Width	17 1/2″
Depth	28 3/8″
Trapway	2″
Large Water Surface	9 1/4″ x 7 1/4″
Shipping Weight	76 lbs

Colors/Finishes:

- White
- Other: Refer to Price Book for additional colors/finishes

Warranty:

- Limited lifetime warranty

NOTES: All dimensions are in inches. Illustrations may not be drawn to scale.

IMPORTANT:
Dimensions of fixtures are nominal and may vary within the range of tolerances established by ASME standard A 112.19.2 THIS FIXTURE QUALIFIES ACCORDING TO ASME TEST PROCEDURES AS A HIGH EFFICIENCY WATER CLOSET WITH AN AVERAGE CONSUMPTION OF 1.28 gpf (4.8 Lpf) OR LESS.