NOTES:

1. APPLY ADHESIVE LOCTITE 680.
2. APPLY LIGHT FILM OF DOW CORNING 111.

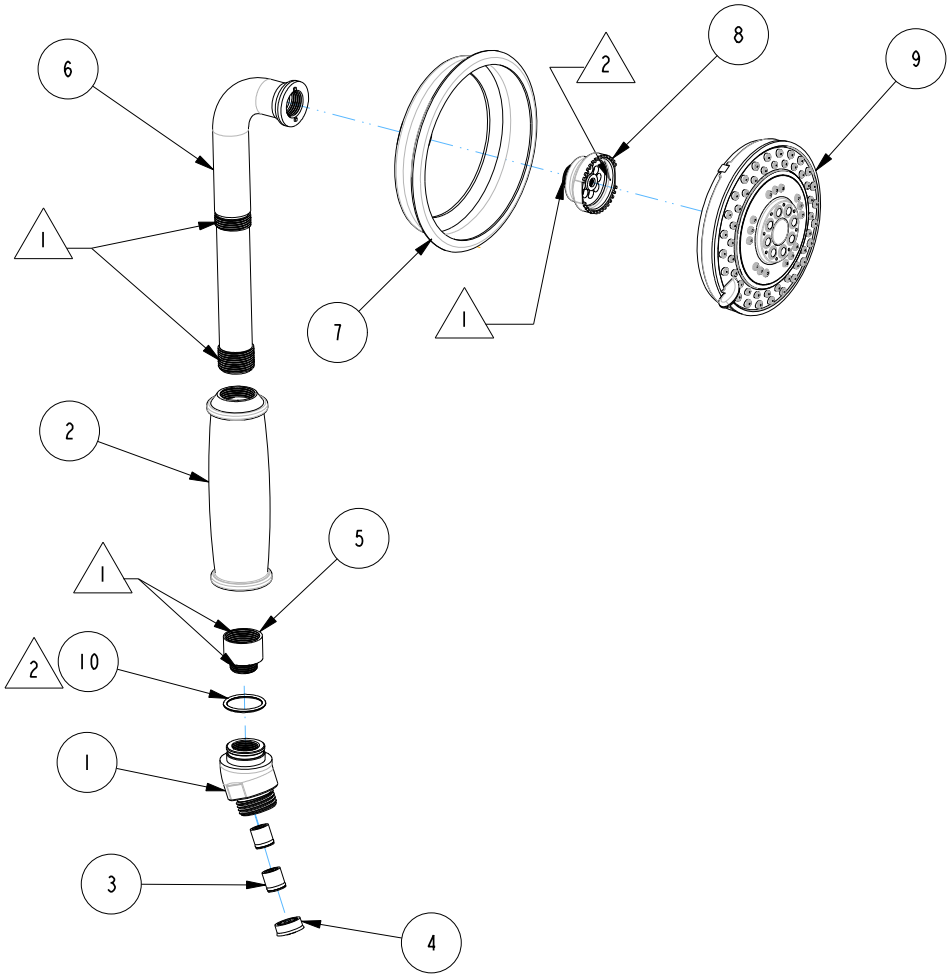

BILL OF MATERIAL (CURRENT LEVEL)

ITEM	PT/ASSY	DESCRIPTION	TYPE	QTY.
1	11562	HAND SPRAY ELBOW END NUT	PART	1
2	11373	SLEEVE	PART	1
3	5-050	CHECK VALVE, NEOPERL DW10, WHITE	PART	2
4	11913	FLOW REGULATOR, 2.0 GPM MAX	PART	1
5	92268	HAND SHOWER ADAPTER	PART	1
6	2-597	TUBE ASSY	ASSEMBLY	1
7	80096	SHOWER HEAD SHELL	PART	1
8	50784	SHOWER HEAD ADAPTER	PART	1
9	8-083	SHOWER ENGINE	PART	1
10	91022	O-RING, #2- 018, EPDM, 65-75 DURO, NSF 61	PART	1

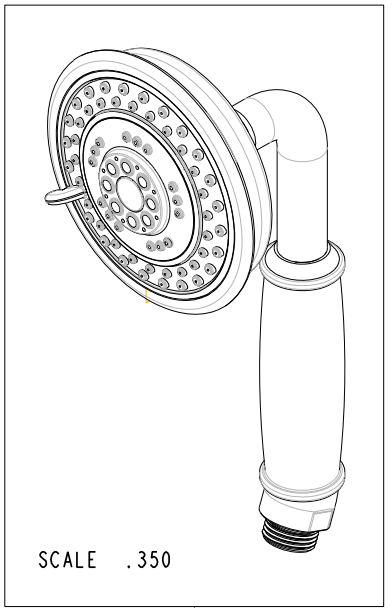

Hung Le

Digitally signed by Hung Le
DN: cn=Hung Le, o=Brasstech, Inc., ou=Designer, email=hle@brasstech.com, c=US
Location: Santa Ana, CA 92705
Date: 2014.06.20 10:31:19 -07'00'

COPYRIGHT 2005 BRASSTECH, INC. THESE DRAWINGS AND THE DESIGNS DEPICTED HEREIN ARE THE PROPRIETARY PROPERTY OF BRASSTECH. ANY USE OR REPRODUCTION IS SUBJECT TO THE EXPRESS APPROVAL OF BRASSTECH. UNAUTHORIZED USE IS STRICTLY PROHIBITED. ALL RIGHTS RESERVED.

BRASSTECH INCORPORATED
2001 E. CARNEGIE AVE.
SANTA ANA, CA 92705
(949) 417-5207

HAND SHOWER - TRADITIONAL

ASSY. NO. 281-1

SCALE .250 | REF. - | SHEET 1 OF 2

REV	REV DESC	DATE
C	EN-2768	06/19/14
B	EN-1668	04/05/11
A	EN-1265	10/22/09
-	ECN-0940	02/11/08

SPECIFICATION DWG

NOTE:
ASSEMBLE ENGINE IN THIS POSITION.

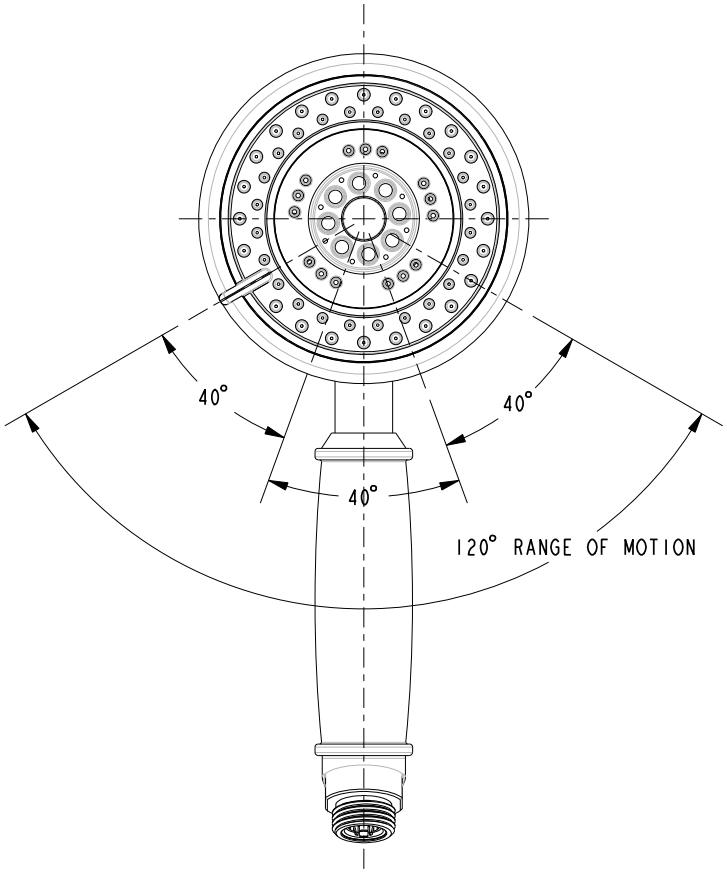

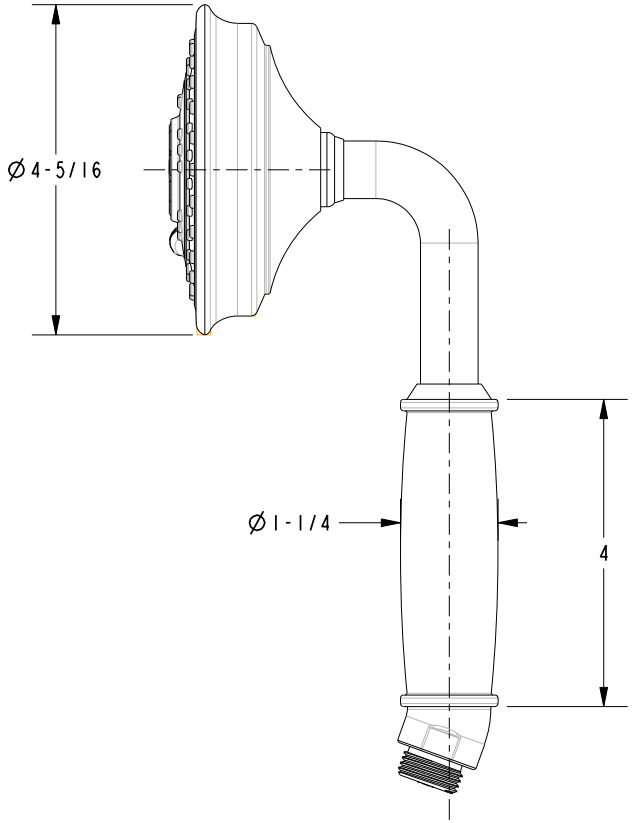

DIMENSIONS ARE IN INCHES AND AN APPROXIMATION OF A TYPICAL INSTALLATION

COPYRIGHT 2005 BRASSTECH, INC. THESE DRAWINGS AND THE DESIGNS DEPICTED HEREIN ARE THE PROPRIETARY PROPERTY OF BRASSTECH. ANY USE OR REPRODUCTION IS SUBJECT TO THE EXPRESS APPROVAL OF BRASSTECH. UNAUTHORIZED USE IS STRICTLY PROHIBITED. ALL RIGHTS RESERVED.

BRASSTECH INCORPORATED
2001 CARNEGIE AVE.
SANTA ANA, CA 92705
(949) 417-5207

DWG NO.	REV
281-1	C

SCALE	REF.	SHEET
.400	-	2 OF 2