808-VT

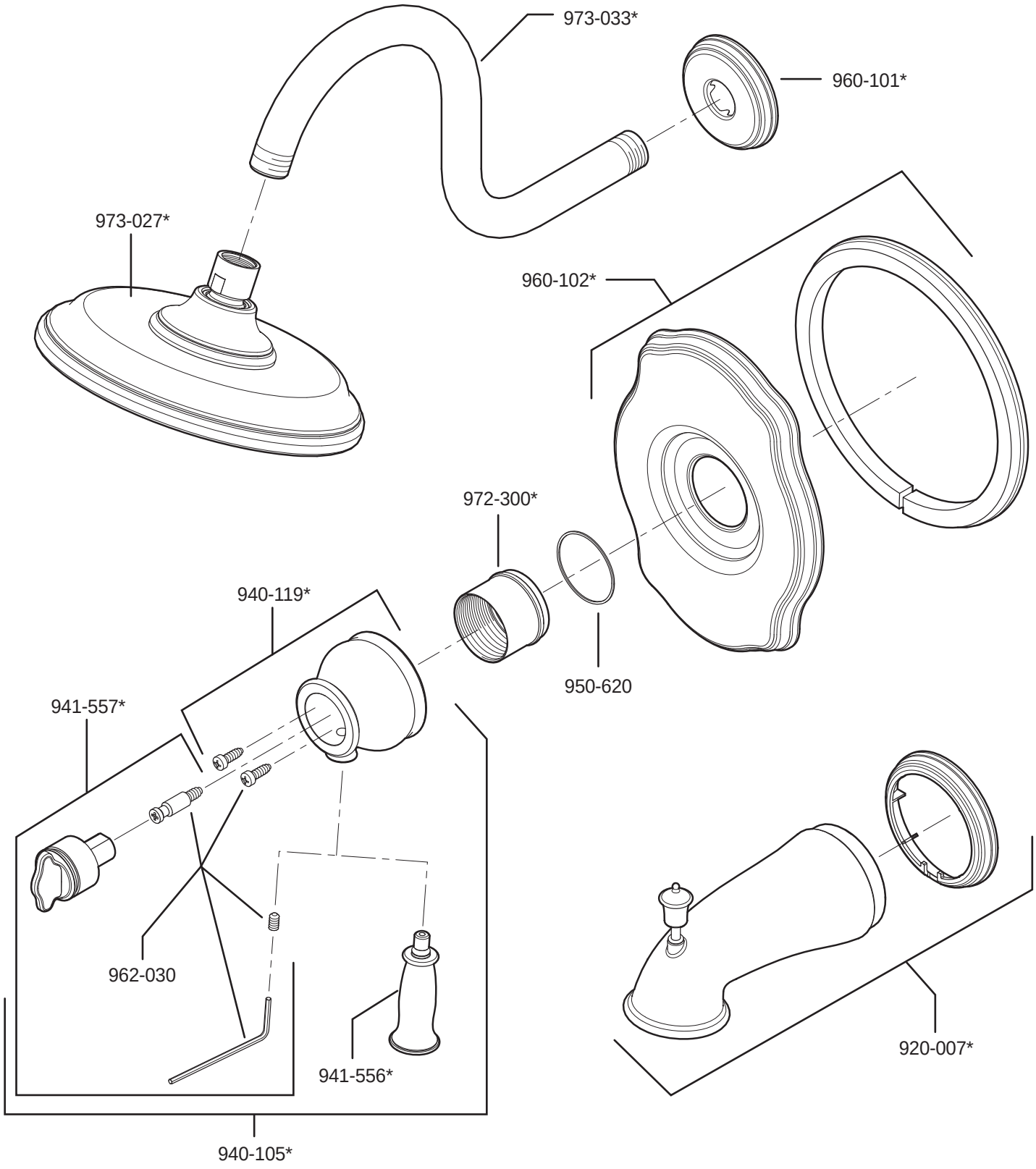

	English	Español	Français
*	Letter Designates Finish	La Letra Indica el Terminado	La Lettre Designe La Fini
A	Polished Chrome	Cromo Pulido	Chrome Poli
J	PVD Brushed Nickel	PVD Niquel Cepillado	PVD Nickel Brosse
Y	Tuscan Bronze	Bronce Toscano	Bronze Le Toscan

Price Pfister®
19701 DaVinci
Lake Forest, CA 92610
Phone: 1-800-Pfaucet
www.pricepfister.com
A BLACK&DECKER COMPANY