PFISTER

Cagney™

Pull-Down Kitchen Faucet

FWKP-400B Finish*(MB)* ❑
F529-7CGS Finish*(SS)* ❑

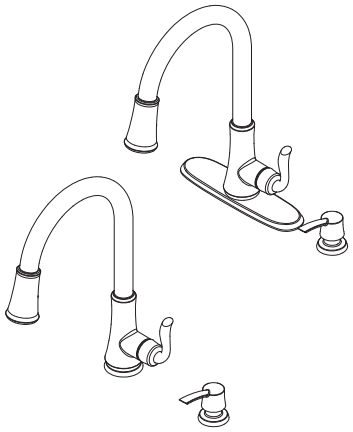

- 1, 2, 3, or 4-Hole Installation
- Single Control
- Pforever Seal

Specifications

Features

- 3 Function Pull-Down Sprayer
- Mounting Hardware Included
- Mounting Posts
- High Arc Spout
- 360º Rotating Spout
- Swivel Spout
- Soap Dispenser Included
- EZ Clean™
- Pfast Connect
- PVD Finish (SS Only)
- Quick Install Tool
- Pforever Seal Ceramic Disc Valve
- Pforever Warranty®

Code Compliance

Pfister products are designed and manufactured in compliance with the following standards and codes:

- IAPMO Certified
- CSA B125 Certified
- ASME A112.18.1
- NSF 61/9 Annex G (Low lead)
- Cal Green Compliant
- ADA Compliant-ANSI A117.1 (Lever handles only)

Dimensions

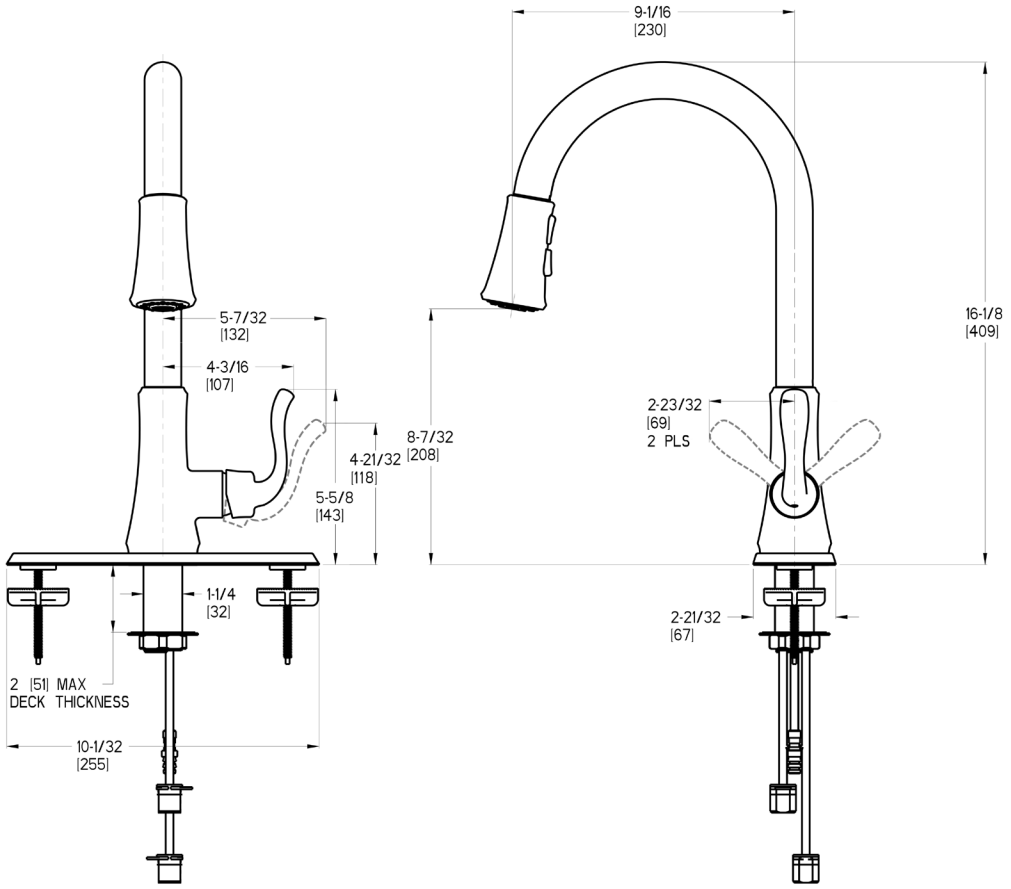

Ø1-3/8 Min to Ø1-1/2 Max. Deck Hole Openings

Top Filling Soap Dispenser

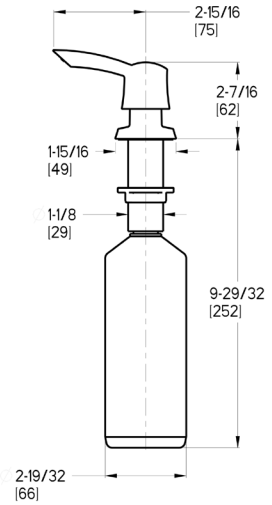

Copyright © 2013, Pfister Inc.