MOEN

Buy it for looks. Buy it for life.®

Specifications

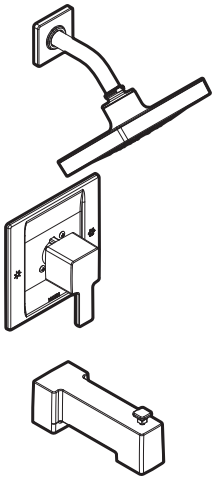

90 DEGREE™ MOENTROL®
Single-Handle Tub/Shower Trim Only

Model: TS3711 series - valve trim only
TS3715 series - shower trim only
TS3713 series - tub/shower trim only

Valves: 63100, 3500 series

FAUCET DESCRIPTION
- Metal construction with various finishes identified by suffix
- Includes showerhead, arm, flange and diverter spout

OPERATION
- Lever style handle with temperature indicator on the escutcheon, pull-on/push-off operation
- Temperature operates through an 180° arc of handle travel (full cold to full hot)
- Adjustable temperature limit stop to control maximum hot water temperature
- Pressure balancing mechanism maintains selected discharge temperature to ± 3.6˚F (±2˚C)

FLOW
- Showerhead limited to 2.5 gpm (9.5 L/min) at 80 psi
- NH Suffix models contain no showerhead

CARTRIDGE
- 1225® cartridge design
- Nonmetallic/nonferrous and stainless steel materials
- Accommodates back to back installations

STANDARDS
- Third party certified to ASME A112.18.1/CSA B-125.1, ASSE 1016 and all applicable requirements referenced therein
- **ADA** for lever handle

WARRANTY
- Lifetime limited warranty against leaks, drips and finish defects to the original consumer purchaser
- 5 year warranty if used in commercial installations

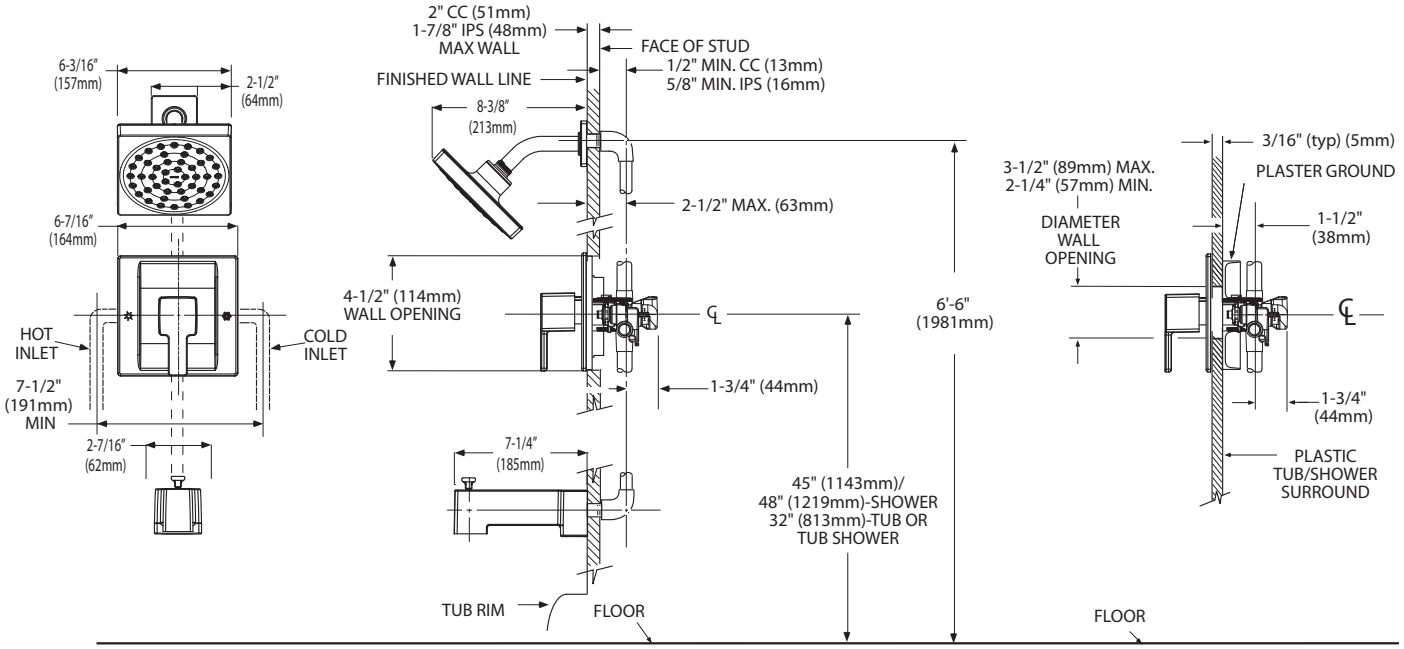

THICK WALL APPLICATION **THIN WALL APPLICATION**

CRITICAL DIMENSIONS

(DO NOT SCALE)

FOR MORE INFORMATION CALL: 1-800-BUY-MOEN
www.moen.com

Rev. 5/16

07/25/2016 SPC17290 S000023429 Released 01