GROHE

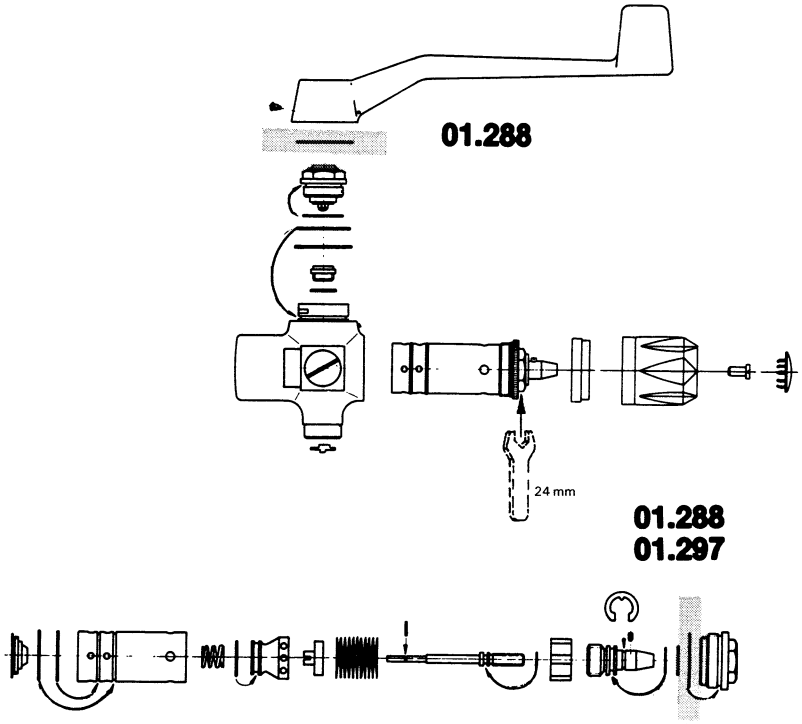

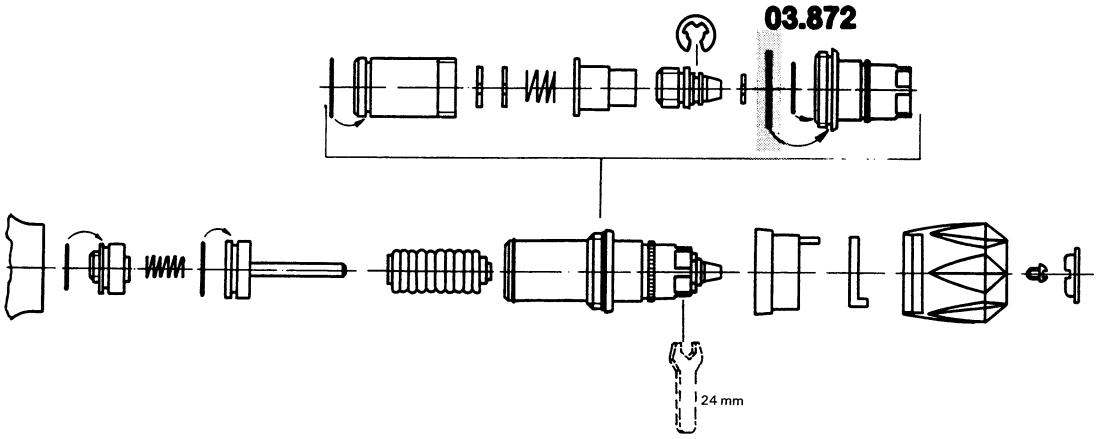

97.821.031/ÄM 2955/08.81