PFISTER

Avalon™

4" Centerset Lavatory Faucet

F-048-CBOC Finish*(C)* ❑
F-048-CBOK Finish*(K)* ❑
F-048-CBOY Finish*(Y)* ❑

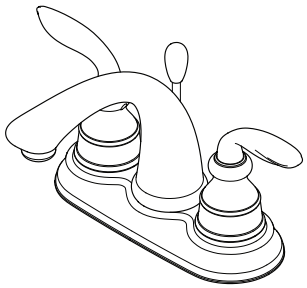

- Two-Handle
- 3-Hole Installation
- Pforever Seal

Specifications

Features

- 1.5 GPM Flow Rate
- Solid Cast Brass Body and Spout
- Metal Lever Handles
- 3-Hole Installation
- Metal Pop-Up
- Includes Metal Supply Nuts
- High-Arc Decorative Spout
- Pforever Seal Ceramic Disc Valves
- Pforever Warranty®

Code Compliance

Pfister products are designed and manufactured in compliance with the following standards and codes:

- IAPMO Certified
- CSA B125 Certified
- ASME A112.18.1
- NSF 61/9 Annex G (Low lead)
- Cal Green Compliant
- EPA WaterSense Certification 1.5 gpm, 5.7 L/Min
- ADA Compliant-ANSI A117.1 (Lever handles only)

Dimensions

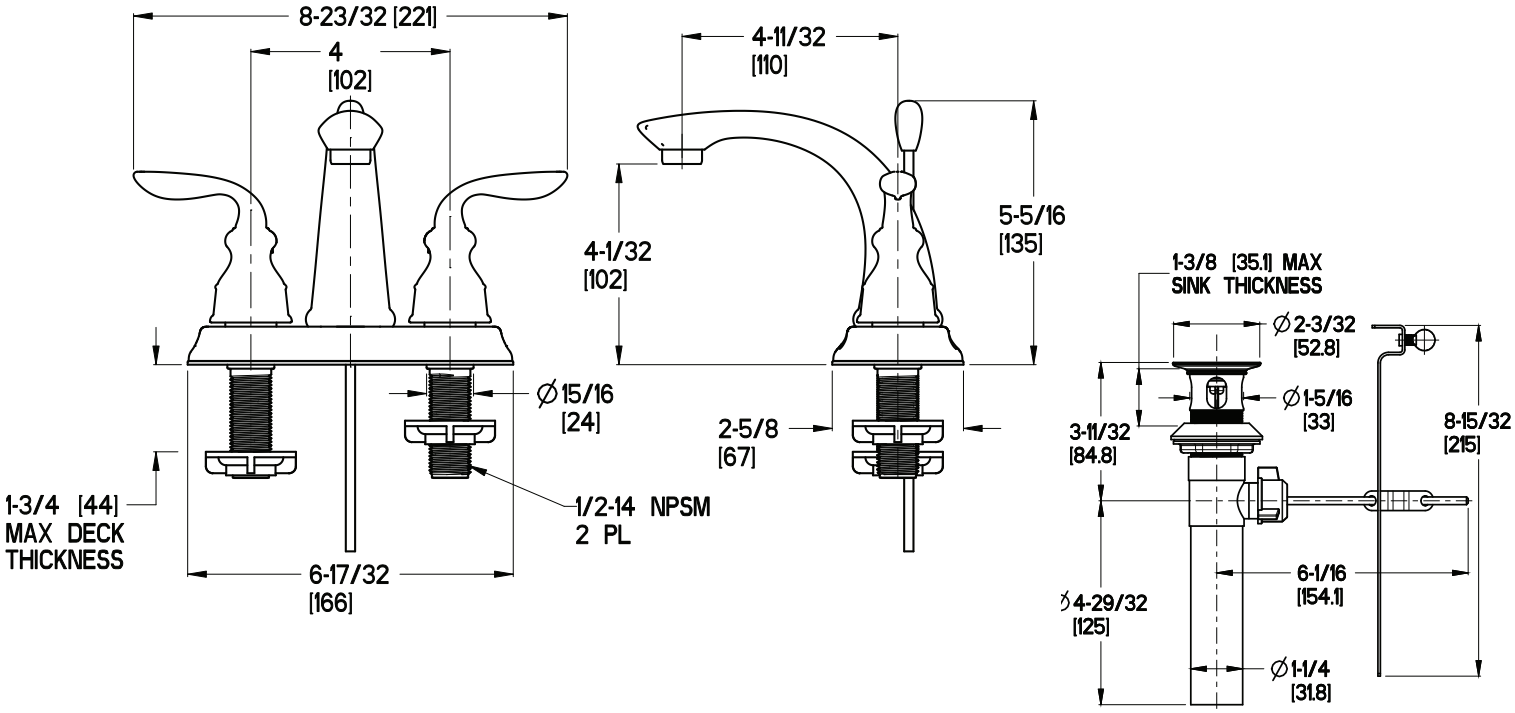

Metal Pop-Up

Ø1 Min to Ø1-1/2 Max. Deck Hole Openings

Copyright © 2015, Pfister Inc.