Grooved Couplings, Fittings & Valves

COOPLOK™ GROOVED

QUALITY

- Manufacturing facility is ISO 9001:2008
- Quality inspections both at the overseas factory and our USA warehouses
- UL Listed & FM Approved – sizes up to 12"

SERVICE

- Dedicated COOPLOK™ customer service staff
- Timely shipment of orders
- Emailed or Faxed confirmation of every order
- Excellent fill rate
- ProPak™ System makes products easier to handle and warehouse

TRACEABILITY

- The SCI logo is on all fittings, couplings, bolts, and gaskets
- Canadian Registration Number (CRN) available at www.smithcooper.com (does not include fabricated fittings)

AVAILABILITY

- Stocked in orange paint or hot dipped galvanized
- Stocked throughout the USA – sizes 1" to 24"

PROTECTION

- USA engineering staff available
- $25,000,000 product liability insurance

Housing	• Ductile Iron conforming to ASTM A-536, Grade 65-45-12
Coatings	• Orange paint • Hot dipped galvanized conforming to ASTM A-153
Hardware	• Electroplated track bolts conforming to ASTM A-183 with a minimum tensile strength of 110,000 psi • 100% magnetic particle inspection of each bolt
Gaskets	• Grade E - EPDM (green stripe): Temperature Range: -30°F (-34°C) to +230°F (+110°C) • Grade T - Nitrile (orange stripe): Temperature Range: -20°F (-29°C) to +180°F (+82°C) • Grade O - Fluoroelastomer (blue stripe): Temperature Range: +20°F (-6°C) to +300°F (+149°C)
Grooves	• Dimensions to AWWA C-606
For Use With	• IPS Carbon & Stainless Steel Pipe

Please see complete installation instructions at www.smithcooper.com for important guidelines and limitations on the use and applications of SCI COOPLOK™ Grooved Couplings and Fittings.

Standard Weight Flexible Couplings

Fig. 65SF & 66SF

Standard Weight Flexible Coupling with "C" Gasket

- Maximum working pressure depending on coupling size and schedule of pipe:
  1" to 6" - 1000 psi (68.9 bar)
  8" to 12" - 800 psi (55.1 bar)
  14" to 20" - 300 psi (20.6 bar)
  24" - 250 psi (17.2 bar)
- UL Listed & FM Approved – 1" thru 12"
- All housings, gaskets and bolts identified by SCI logo
- Gasket Grade E - EPDM (green stripe) -30˚F (-34˚C) to +230˚F (+110˚C)
- Gasket Grade T - Nitrile (orange stripe) -20˚F (-29˚C) to +180˚F (+82˚C)
- Gasket Grade O - Fluoroelastomer (blue stripe) +20°F (-6°C) to +300°F (+149°C)
- Ductile iron housings conform to ASTM A-536 Grade 65-45-12
- Groove dimensions to AWWA C-606
- Finishes: Orange enamel paint
  Hot dipped galvanized conforming to ASTM A-153
- Smith-Cooper Warranty only applies to assemblies made with housings, gaskets and bolts carrying the SCI logo

c UL us LISTED

FM APPROVED

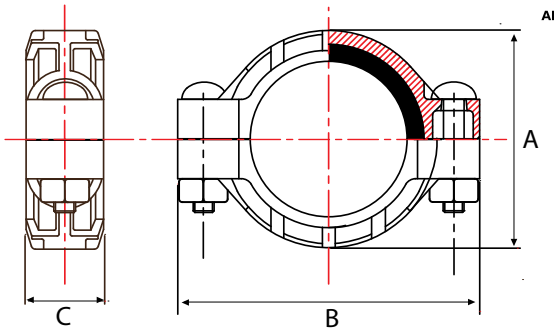

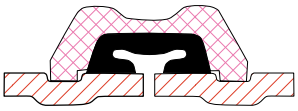

"C" Style Gasket

Pipe Size in / *mm*	Part Number Painted	Part Number Galvanized	Pipe OD in / *mm*	Max Pipe End Gap in / *mm*	Dimensions A in / *mm*	Dimensions B in / *mm*	Dimensions C in / *mm*	Deflection Degrees	Number of Sections	Case Qty	Weight lb / *kg*
1 *25*	65SF3010	66SF3010	1.315 *33.7*	1/8 *3.2*	2.34 *59.5*	3.94 *100.0*	1.73 *44.0*	2.3	2	26	1.3 *0.6*
1-1/4 *32*	65SF3012	66SF3012	1.660 *42.2*	1/8 *3.2*	2.70 *68.5*	4.41 *112.0*	1.89 *48.0*	2.1	2	24	2.2 *1.0*
1-1/2 *40*	65SF3014	66SF3014	1.900 *48.3*	1/8 *3.2*	2.93 *74.5*	4.69 *119.0*	1.89 *48.0*	1.9	2	24	2.3 *1.0*
2 *50*	65SF3020	66SF3020	2.375 *60.3*	1/8 *3.2*	3.48 *88.5*	5.20 *132.0*	1.89 *48.0*	2.0	2	20	2.5 *1.1*
2-1/2 *65*	65SF3024	66SF3024	2.875 *73.0*	1/8 *3.2*	4.04 *102.5*	5.71 *145.0*	1.89 *48.0*	2.3	2	16	3.0 *1.4*
3 *80*	65SF3030	66SF3030	3.500 *88.9*	1/8 *3.2*	4.63 *117.5*	6.50 *165.0*	1.89 *48.0*	2.0	2	16	3.3 *1.5*
4 *100*	65SF3040	66SF3040	4.500 *114.3*	1/4 *6.4*	6.00 *152.4*	8.35 *212.0*	2.13 *54.0*	2.2	2	8	6.1 *2.8*
5 *125*	65SF3050	66SF3050	5.563 *141.3*	1/4 *6.4*	7.07 *179.5*	10.04 *255.0*	2.13 *54.0*	1.8	2	6	8.5 *3.9*
6 *150*	65SF3060	66SF3060	6.625 *168.3*	1/4 *6.4*	8.31 *211.0*	11.42 *290.0*	2.15 *54.5*	1.6	2	4	10.6 *4.8*
8 *200*	65SF3080	66SF3080	8.625 *219.1*	1/4 *6.4*	10.35 *263.0*	13.62 *346.0*	2.48 *63.0*	1.4	2	-	16.4 *7.5*
10 *250*	65SF3100	66SF3100	10.750 *273.0*	1/4 *6.4*	12.87 *327.0*	16.61 *422.0*	2.64 *67.0*	1.2	2	-	25.3 *11.5*
12 *300*	65SF3120	66SF3120	12.750 *323.9*	1/4 *6.4*	14.88 *378.0*	18.66 *474.0*	2.64 *67.0*	1.1	2	-	29.6 *13.4*
14 *350*	65SF3140	66SF3140	14.000 *355.6*	1/4 *6.4*	15.94 *405.0*	19.96 *507.0*	2.91 *74.0*	1.0	4	-	39.2 *17.8*
16 *400*	65SF3160	66SF3160	16.000 *406.4*	1/4 *6.4*	17.72 *450.0*	22.01 *559.0*	2.91 *74.0*	0.9	4	-	42.9 *19.5*
18 *450*	65SF3180	66SF3180	18.000 *457.6*	1/4 *6.4*	20.08 *510.0*	24.53 *623.0*	3.15 *80.0*	0.8	4	-	54.0 *24.5*
20 *500*	65SF3200	66SF3200	20.000 *508.0*	1/4 *6.4*	22.09 *561.0*	26.57 *675.0*	3.15 *80.0*	0.7	4	-	57.3 *26.0*
24 *600*	65SF3240	66SF3240	24.000 *609.6*	1/4 *6.4*	26.10 *663.0*	30.59 *777.0*	3.15 *80.0*	0.6	6	-	76.9 *34.9*

Fig. 65SFTRI & 66SFTRI

Standard Weight Flexible Coupling with Triple Seal Gasket

- Maximum working pressure depending on coupling size and schedule of pipe:
  1" to 6" - 1000 psi (68.9 bar)
  8" - 800 psi (55.1 bar)
- All housings, gaskets and bolts identified by SCI logo
- Gasket Grade E - EPDM (green stripe) -30˚F (-34˚C) to +230˚F (+110˚C)
- Other gasket materials available by special order
- Ductile iron housings conform to ASTM A-536 Grade 65-45-12
- Groove dimensions to AWWA C-606
- Finishes: Orange enamel paint
  Hot dipped galvanized conforming to ASTM A-153
- Smith-Cooper Warranty only applies to assemblies made with housings, gaskets and bolts carrying the SCI logo

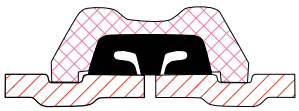

Triple Seal Gasket – EPDM

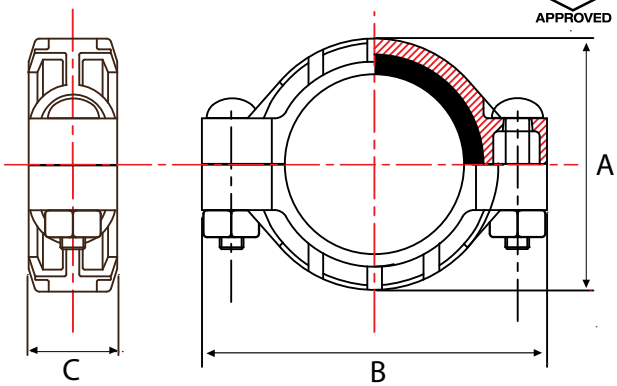

Pipe Size in / *mm*	Part Number Painted	Part Number Galvanized	Pipe OD in / *mm*	Max Pipe End Gap in / *mm*	Dimensions A in / *mm*	Dimensions B in / *mm*	Dimensions C in / *mm*	Deflection Degrees	Number of Sections	Case Qty	Weight lb / *kg*
1-1/4 *32*	65SFTRI3012	66SFTRI3012	1.660 *42.2*	1/8 *3.2*	2.70 *68.5*	4.41 *112.0*	1.89 *48.0*	2.1	2	24	2.2 *1.0*
1-1/2 *40*	65SFTRI3014	66SFTRI3014	1.900 *48.3*	1/8 *3.2*	2.93 *74.5*	4.69 *119.0*	1.89 *48.0*	1.9	2	24	2.3 *1.0*
2 *50*	65SFTRI3020	66SFTRI3020	2.375 *60.3*	1/8 *3.2*	3.48 *88.5*	5.20 *132.0*	1.89 *48.0*	2.0	2	20	2.5 *1.1*
2-1/2 *65*	65SFTRI3024	66SFTRI3024	2.875 *73.0*	1/8 *3.2*	4.04 *102.5*	5.71 *145.0*	1.89 *48.0*	2.3	2	16	3.0 *1.4*
3 *80*	65SFTRI3030	66SFTRI3030	3.500 *88.9*	1/8 *3.2*	4.63 *117.5*	6.50 *165.0*	1.89 *48.0*	2.0	2	16	3.3 *1.5*
4 *100*	65SFTRI3040	66SFTRI3040	4.500 *114.3*	1/4 *6.4*	6.00 *152.4*	8.35 *212.0*	2.13 *54.0*	2.2	2	8	6.1 *2.8*
5 *125*	65SFTRI3050	66SFTRI3050	5.563 *141.3*	1/4 *6.4*	7.07 *179.5*	10.04 *255.0*	2.13 *54.0*	1.8	2	6	8.5 *3.9*
6 *150*	65SFTRI3060	66SFTRI3060	6.625 *168.3*	1/4 *6.4*	8.31 *211.0*	11.42 *290.0*	2.15 *54.5*	1.6	2	4	10.6 *4.8*
8 *200*	65SFTRI3080	66SFTRI3080	8.625 *219.1*	1/4 *6.4*	10.35 *263.0*	13.62 *346.0*	2.48 *63.0*	1.4	2	-	16.4 *7.5*

Please see complete installation instructions at www.smithcooper.com for important guidelines and limitations on the use and applications of COOPLOK™ Grooved Couplings and Fittings.

Standard Weight Rigid Couplings

Fig. 65SR & 66SR

Standard Weight Rigid Coupling with "C" Gasket

- Maximum working pressure depending on coupling size and schedule of pipe:
  1" to 6" - 1000 psi (68.9 bar)
  8" - 800 psi (55.1 bar)
  10" & 12" - 600 psi (41.3 bar)
  14" to 20" - 300 psi (20.6 bar)
  24" - 250 psi (17.2 bar)
- UL Listed & FM Approved – 1" thru 12"
- All housings, gaskets and bolts identified by SCI logo
- Gasket Grade E - EPDM (green stripe) -30˚F (-34˚C) to +230˚F (+110˚C)
- Gasket Grade T - Nitrile (orange stripe) -20˚F (-29˚C) to +180˚F (+82˚C)
- Gasket Grade O - Fluoroelastomer (blue stripe) +20°F (-6°C) to +300°F (+149°C)
- Ductile iron housings conform to ASTM A-536 Grade 65-45-12
- Groove dimensions to AWWA C-606
- Finishes: Orange enamel paint
  Hot dipped galvanized conforming to ASTM A-153
- Smith-Cooper Warranty only applies to assemblies made with housings, gaskets and bolts carrying the SCI logo

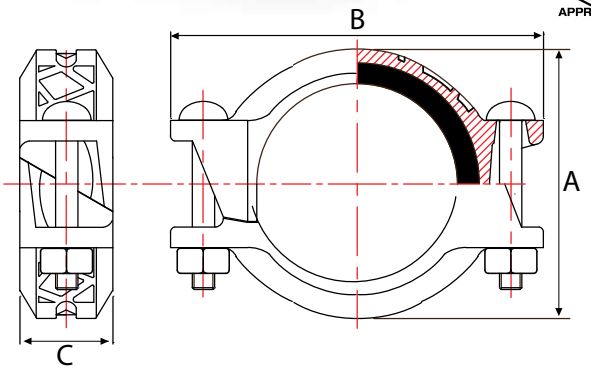

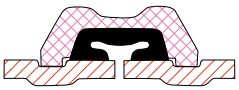

"C" Style Gasket

Pipe Size in / *mm*	Part Number Painted	Part Number Galvanized	Pipe OD in / *mm*	Max Pipe End Gap in / *mm*	Dimensions A in / *mm*	Dimensions B in / *mm*	Dimensions C in / *mm*	Number of Sections	Case Qty	Weight lb / *kg*
1 *25*	65SR3010	66SR3010	1.315 *33.7*	1/16 *1.6*	2.34 *59.5*	3.94 *100.0*	1.73 *44.0*	2	26	1.3 *0.6*
1-1/4 *32*	65SR3012	66SR3012	1.660 *42.2*	1/16 *1.6*	2.74 *69.5*	4.25 *108.0*	1.85 *47.0*	2	32	1.6 *0.7*
1-1/2 *40*	65SR3014	66SR3014	1.900 *48.3*	1/16 *1.6*	2.97 *75.5*	4.49 *114.0*	1.85 *47.0*	2	32	1.7 *0.8*
2 *50*	65SR3020	66SR3020	2.375 *60.3*	1/16 *1.6*	3.48 *88.5*	4.88 *124.0*	1.89 *48.0*	2	24	2.2 *1.0*
2-1/2 *65*	65SR3024	66SR3024	2.875 *73.0*	1/16 *1.6*	4.00 *101.5*	4.79 *147.0*	1.89 *48.0*	2	16	2.8 *1.3*
3 *80*	65SR3030	66SR3030	3.500 *88.9*	1/16 *1.6*	4.59 *116.5*	6.38 *162.0*	1.89 *48.0*	2	16	3.2 *1.4*
4 *100*	65SR3040	66SR3040	4.500 *114.3*	1/8 *3.2*	5.87 *149.0*	7.72 *196.0*	2.09 *53.0*	2	10	5.0 *2.2*
5 *125*	65SR3050	66SR3050	5.563 *141.3*	1/8 *3.2*	6.95 *176.5*	9.29 *236.0*	2.09 *53.0*	2	6	6.7 *3.0*
6 *150*	65SR3060	66SR3060	6.625 *168.3*	1/8 *3.2*	8.15 *207.0*	10.55 *268.0*	2.09 *53.0*	2	5	8.1 *3.7*
8 *200*	65SR3080	66SR3080	8.625 *219.1*	1/8 *3.2*	10.24 *260.0*	13.23 *336.0*	2.56 *65.0*	2	-	14.3 *6.5*
10 *250*	65SR3100	66SR3100	10.750 *273.0*	1/8 *3.2*	12.71 *323.0*	15.82 *402.0*	2.56 *65.0*	2	-	20.7 *9.4*
12 *300*	65SR3120	66SR3120	12.750 *323.9*	1/8 *3.2*	14.92 *379.0*	18.03 *458.0*	2.56 *65.0*	2	-	25.4 *11.5*
14 *350*	65SR3140	66SR3140	14.000 *355.6*	1/8 *3.2*	16.02 *407.0*	19.45 *494.0*	2.87 *73.0*	3	-	33.5 *15.2*
16 *400*	65SR3160	66SR3160	16.000 *406.4*	1/8 *3.2*	18.03 *458.0*	21.50 *546.0*	2.87 *73.0*	3	-	36.9 *16.7*
18 *450*	65SR3180	66SR3180	18.000 *457.6*	1/8 *3.2*	20.16 *512.0*	23.46 *596.0*	2.99 *76.0*	3	-	9.4 *17.9*
20 *500*	65SR3200	66SR3200	20.000 *508.0*	1/8 *3.2*	22.13 *562.0*	26.06 *662.0*	3.07 *78.0*	4	-	53.9 *24.5*
24 *600*	65SR3240	66SR3240	24.000 *609.6*	1/8 *3.2*	26.14 *664.0*	30.08 *764.0*	3.07 *78.0*	4	-	69.0 *31.3*

Fig. 65SRTRI & 66SRTRI

Standard Weight Rigid Coupling with Triple Seal Gasket

- Maximum working pressure depending on coupling size and schedule of pipe:
  1" to 6" - 1000 psi (68.9 bar)
  8" - 800 psi (55.1 bar)
- All housings, gaskets and bolts identified by SCI logo
- Gasket Grade E - EPDM (green stripe) -30˚F (-34˚C) to +230˚F (+110˚C)
- Other gasket materials available by special order
- Ductile iron housings conform to ASTM A-536 Grade 65-45-12
- Groove dimensions to AWWA C-606
- Finishes: Orange enamel paint
  Hot dipped galvanized conforming to ASTM A-153
- Smith-Cooper Warranty only applies to assemblies made with housings, gaskets and bolts carrying the SCI logo

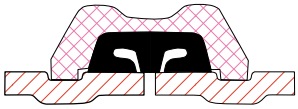

Triple Seal Gasket – EPDM

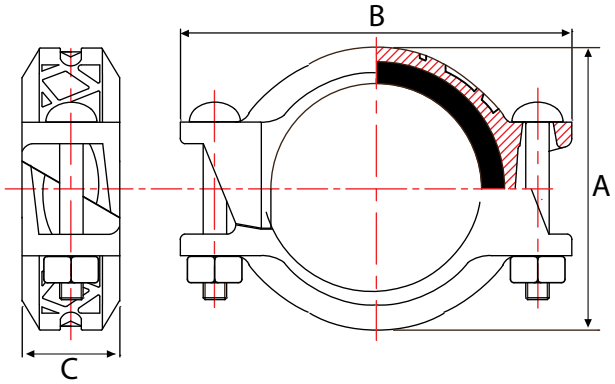

Pipe Size in / *mm*	Part Number Painted	Part Number Galvanized	Pipe OD in / *mm*	Max Pipe End Gap in / *mm*	Dimensions A in / *mm*	Dimensions B in / *mm*	Dimensions C in / *mm*	Number of Sections	Case Qty	Weight lb / *kg*
1-1/4 *32*	65SRTRI3012	66SRTRI3012	1.660 *42.2*	1/16 *1.6*	2.74 *69.5*	4.25 *108.0*	1.85 *47.0*	2	32	1.6 *0.7*
1-1/2 *40*	65SRTRI3014	66SRTRI3014	1.900 *48.3*	1/16 *1.6*	2.97 *75.5*	4.49 *114.0*	1.85 *47.0*	2	32	1.7 *0.8*
2 *50*	65SRTRI3020	66SRTRI3020	2.375 *60.3*	1/16 *1.6*	3.48 *88.5*	4.88 *124.0*	1.89 *48.0*	2	24	2.2 *1.0*
2-1/2 *65*	65SRTRI3024	66SRTRI3024	2.875 *73.0*	1/16 *1.6*	4.00 *101.5*	4.79 *147.0*	1.89 *48.0*	2	16	2.8 *1.3*
3 *80*	65SRTRI3030	66SRTRI3030	3.500 *88.9*	1/16 *1.6*	4.59 *116.5*	6.38 *162.0*	1.89 *48.0*	2	16	3.2 *1.5*
4 *100*	65SRTRI3040	66SRTRI3040	4.500 *114.3*	1/8 *3.2*	5.87 *149.0*	7.72 *196.0*	2.09 *53.0*	2	10	5.0 *2.3*
5 *125*	65SRTRI3050	66SRTRI3050	5.563 *141.3*	1/8 *3.2*	6.95 *176.5*	9.29 *236.0*	2.09 *53.0*	2	6	6.7 *3.0*
6 *150*	65SRTRI3060	66SRTRI3060	6.625 *168.3*	1/8 *3.2*	8.15 *207.0*	10.55 *268.0*	2.09 *53.0*	2	5	8.1 *3.7*
8 *200*	65SRTRI3080	66SRTRI3080	8.625 *219.1*	1/8 *3.2*	10.24 *260.0*	13.23 *336.0*	2.56 *65.0*	2	-	14.3 *6.5*

Please see complete installation instructions at www.smithcooper.com for important guidelines and limitations on the use and applications of COOPLOK™ Grooved Couplings and Fittings.

Lightweight Flexible Couplings

Fig. 65LF & 66LF

Lightweight Flexible Coupling with "C" Gasket

- Maximum working pressure 500 psi (34.5 bar) depending on coupling size and schedule of pipe
- All housings, gaskets and bolts identified by SCI logo
- 100% magnetic particle inspection of each bolt
- Each bolt has a minimum tensile strength of 110,000 psi
- Gasket Grade E - EPDM (green stripe) -30˚F (-34˚C) to +230˚F (+110˚C)
- Gasket Grade T - Nitrile (orange stripe) -20˚F (-29˚C) to +180˚F (+82˚C)
- Gasket Grade O - Fluoroelastomer (blue stripe) +20°F (-6°C) to +300°F (+149°C)
- Ductile iron housings conform to ASTM A-536 Grade 65-45-12
- Groove Dimensions to AWWA C-606
- Finishes: Orange enamel paint
  Hot dipped galvanized conforming to ASTM A-153
- Smith-Cooper Warranty only applies to assemblies made with housings, gaskets and bolts carrying the SCI logo

C UL US LISTED

FM APPROVED

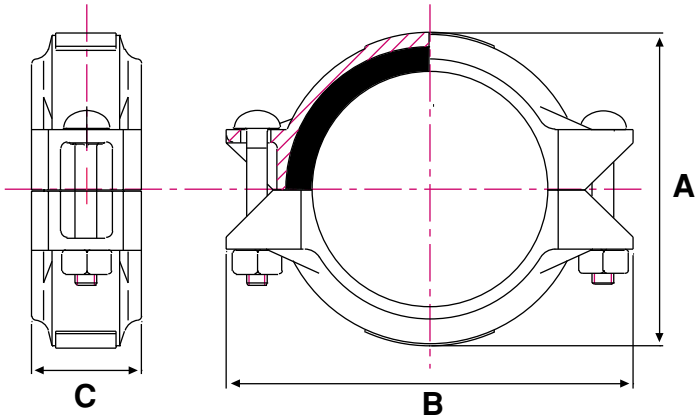

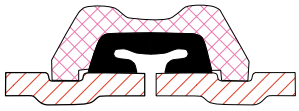

"C" Style Gasket

Pipe Size in / *mm*	Part Number Painted	Part Number Galvanized	Pipe OD in / *mm*	Max Pipe End Gap in / *mm*	Dimensions A in / *mm*	Dimensions B in / *mm*	Dimensions C in / *mm*	Deflection Degrees	Case Qty	Weight lb / *kg*
1-1/4 *32*	65LF3012	66LF3012	1.660 *42.2*	1/8 *3.2*	2.58 *65.5*	4.09 *103.9*	1.85 *47.0*	2.1°	24	1.2 *0.5*
1-1/2 *40*	65LF3014	66LF3014	1.900 *48.3*	1/8 *3.2*	2.85 *72.4*	4.37 *111.0*	1.85 *47.0*	1.9°	36	1.3 *0.6*
2 *50*	65LF3020	66LF3020	2.375 *60.3*	1/8 *3.2*	3.37 *85.6*	4.80 *121.9*	1.85 *47.0*	2.0°	30	1.7 *0.8*
2-1/2 *65*	65LF3024	66LF3024	2.875 *73.0*	1/8 *3.2*	3.88 *98.6*	5.28 *134.1*	1.85 *47.0*	2.3°	24	1.9 *0.9*
3 *80*	65LF3030	66LF3030	3.500 *88.9*	1/8 *3.2*	4.40 *111.8*	5.91 *150.1*	1.85 *47.0*	2.0°	20	2.2 *1.0*
4 *100*	65LF3040	66LF3040	4.500 *114.3*	1/4 *6.4*	5.75 *146.1*	7.44 *189.0*	2.01 *51.1*	2.2°	10	3.6 *1.6*
5 *125*	65LF3050	66LF3050	5.563 *141.3*	1/4 *6.4*	6.79 *172.5*	9.13 *231.9*	2.01 *51.1*	1.8°	8	5.1 *2.3*
6 *150*	65LF3060	66LF3060	6.625 *168.3*	1/4 *6.4*	7.95 *201.9*	10.31 *261.9*	2.01 *51.1*	1.6°	5	6.0 *2.7*
8 *200*	65LF3080	66LF3080	8.625 *219.1*	1/4 *6.4*	10.80 *274.3*	13.07 *332.0*	2.52 *64.0*	1.4°	-	10.7 *4.8*

Fig. 65LFTRI & 66LFTRI

Lightweight Flexible Coupling with Triple Seal Gasket

- Maximum working pressure 500 psi (34.5 bar) depending on coupling size and schedule of pipe
- All housings, gaskets and bolts identified by SCI logo
- 100% magnetic particle inspection of each bolt
- Each bolt has a minimum tensile strength of 110,000 psi
- Gasket Grade E - EPDM (green stripe) -30˚F (-34˚C) to +230˚F (+110˚C)
- Ductile iron housings conform to ASTM A-536 Grade 65-45-12
- Groove dimensions to AWWA C-606
- Finishes: Orange enamel paint
  Hot dipped galvanized conforming to ASTM A-153
- Smith-Cooper Warranty only applies to assemblies made with housings, gaskets and bolts carrying the SCI logo

c UL us LISTED

FM APPROVED

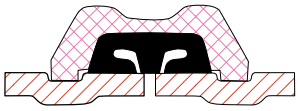

Triple Seal Gasket – EPDM

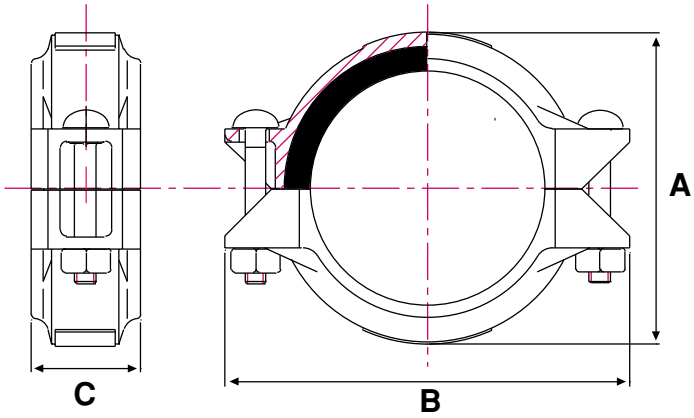

Pipe Size in / *mm*	Part Number Painted	Part Number Galvanized	Pipe OD in / *mm*	Max Pipe End Gap in / *mm*	Dimensions A in / *mm*	Dimensions B in / *mm*	Dimensions C in / *mm*	Deflection Degrees	Case Qty	Weight lb / *kg*
1-1/4 *32*	65LFTRI3012	66LFTRI3012	1.660 *42.2*	1/8 *3.2*	2.58 *65.5*	4.09 *103.9*	1.85 *47.0*	2.1°	36	1.2 *0.5*
1-1/2 *40*	65LFTRI3014	66LFTRI3014	1.900 *48.3*	1/8 *3.2*	2.85 *72.4*	4.37 *111.0*	1.85 *47.0*	1.9°	36	1.3 *0.6*
2 *50*	65LFTRI3020	66LFTRI3020	2.375 *60.3*	1/8 *3.2*	3.37 *85.6*	4.80 *121.9*	1.85 *47.0*	2.0°	30	1.7 *0.8*
2-1/2 *65*	65LFTRI3024	66LFTRI3024	2.875 *73.0*	1/8 *3.2*	3.88 *98.6*	5.28 *134.1*	1.85 *47.0*	2.3°	24	1.9 *0.9*
3 *80*	65LFTRI3030	66LFTRI3030	3.500 *88.9*	1/8 *3.2*	4.40 *111.8*	5.91 *150.1*	1.85 *47.0*	2.0°	20	2.2 *1.0*
4 *100*	65LFTRI3040	66LFTRI3040	4.500 *114.3*	1/4 *6.4*	5.75 *146.1*	7.44 *189.0*	2.01 *51.1*	2.2°	18	3.6 *1.6*
5 *125*	65LFTRI3050	66LFTRI3050	5.563 *141.3*	1/4 *6.4*	6.79 *172.5*	9.13 *231.9*	2.01 *51.1*	1.8°	12	5.1 *2.3*
6 *150*	65LFTRI3060	66LFTRI3060	6.625 *168.3*	1/4 *6.4*	7.95 *201.9*	10.31 *261.9*	2.01 *51.1*	1.6°	10	6.0 *2.7*
8 *200*	65LFTRI3080	66LFTRI3080	8.625 *219.1*	1/4 *6.4*	10.80 *274.3*	13.07 *332.0*	2.52 *64.0*	1.4°	-	10.7 *4.8*

Lightweight Rigid Couplings

Fig. 65LR & 66LR

Lightweight Rigid Coupling with "C" Gasket

- Maximum working pressure 500 psi (34.5 bar) depending on coupling size and schedule of pipe
- All housings, gaskets and bolts identified by SCI logo
- 100% magnetic particle inspection of each bolt
- Each bolt has a minimum tensile strength of 110,000 psi
- Gasket Grade E - EPDM (green stripe) -30˚F (-34˚C) to +230˚F (+110˚C)
- Gasket Grade T - Nitrile (orange stripe) -20˚F (-29˚C) to +180˚F (+82˚C)
- Gasket Grade O - Fluoroelastomer (blue stripe) +20°F (-6°C) to +300°F (+149°C)
- Ductile iron housings conform to ASTM A-536 Grade 65-45-12
- Groove dimensions to AWWA C-606
- Finishes: Orange enamel paint
  Hot dipped galvanized conforming to ASTM A-153
- Smith-Cooper Warranty only applies to assemblies made with housings, gaskets and bolts carrying the SCI logo

c UL us LISTED

FM APPROVED

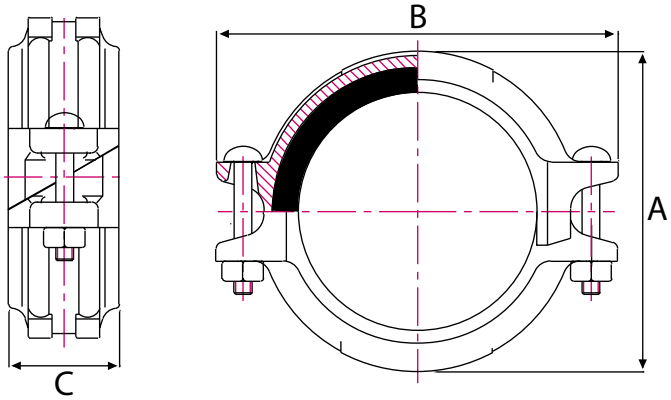

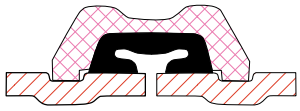

"C" Style Gasket

Pipe Size in / *mm*	Part Number Painted	Part Number Galvanized	Pipe OD in / *mm*	Max Pipe End Gap in / *mm*	Dimensions A in / *mm*	Dimensions B in / *mm*	Dimensions C in / *mm*	Case Qty	Weight lb / *kg*
1-1/4 *32*	65LR3012	66LR3012	1.660 *42.2*	1/16 *1.6*	2.66 *67.6*	4.09 *103.9*	1.85 *47.0*	24	1.3 *0.6*
1-1/2 *40*	65LR3014	66LR3014	1.900 *48.3*	1/16 *1.6*	2.93 *74.4*	4.37 *111.0*	1.85 *47.0*	36	1.4 *0.6*
2 *50*	65LR3020	66LR3020	2.375 *60.3*	1/16 *1.6*	3.44 *87.4*	4.80 *121.9*	1.85 *47.0*	30	1.7 *0.8*
2-1/2 *65*	65LR3024	66LR3024	2.875 *73.0*	1/16 *1.6*	3.96 *100.6*	5.28 *134.1*	1.85 *47.0*	24	2.0 *0.9*
3 *80*	65LR3030	66LR3030	3.500 *88.9*	1/16 *1.6*	4.55 *115.6*	5.91 *150.1*	1.85 *47.0*	20	2.2 *1.0*
4 *100*	65LR3040	66LR3040	4.500 *114.3*	1/8 *3.2*	5.83 *148.1*	7.28 *184.9*	2.01 *51.1*	10	3.4 *1.5*
5 *125*	65LR3050	66LR3050	5.563 *141.3*	1/8 *3.2*	6.87 *174.5*	8.62 *218.9*	2.01 *51.1*	8	4.4 *2.0*
6 *150*	65LR3060	66LR3060	6.625 *168.3*	1/8 *3.2*	8.03 *204.0*	9.76 *247.9*	2.01 *51.1*	6	5.4 *2.4*
8 *200*	65LR3080	66LR3080	8.625 *219.1*	1/8 *3.2*	10.16 *258.1*	12.52 *318.0*	2.52 *64.0*	-	10.5 *4.8*

Fig. 65LRTRI & 66LRTRI

Lightweight Rigid Coupling with Triple Seal Gasket

- Maximum working pressure 500 psi (34.5 bar) depending on coupling size and schedule of pipe
- All housings, gaskets and bolts identified by SCI logo
- 100% magnetic particle inspection of each bolt
- Each bolt has a minimum tensile strength of 110,000 psi
- Gasket Grade E - EPDM (green stripe) -30˚F (-34˚C) to +230˚F (+110˚C)
- Other gasket materials available by special order
- Ductile iron housings conform to ASTM A-536 Grade 65-45-12
- Groove dimensions to AWWA C-606
- Finishes: Orange enamel paint
  Hot dipped galvanized conforming to ASTM A-153
- Smith-Cooper Warranty only applies to assemblies made with housings, gaskets and bolts carrying the SCI logo

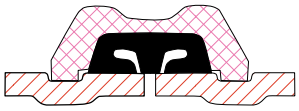

Triple Seal Gasket – EPDM

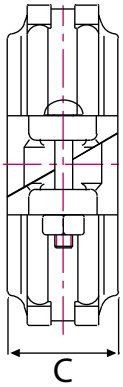

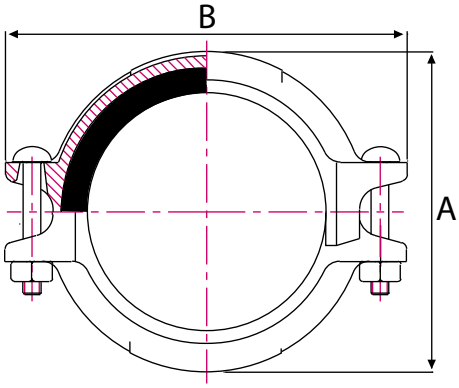

Pipe Size in / *mm*	Part Number Painted	Part Number Galvanized	Pipe OD in / *mm*	Max Pipe End Gap in / *mm*	Dimensions A in / *mm*	Dimensions B in / *mm*	Dimensions C in / *mm*	Case Qty	Weight lb / *kg*
1-1/4 *32*	65LRTRI3012	66LRTRI3012	1.660 *42.2*	1/16 *1.6*	2.66 *67.6*	4.09 *103.9*	1.85 *47.0*	36	1.3 *0.6*
1-1/2 *40*	65LRTRI3014	66LRTRI3014	1.900 *48.3*	1/16 *1.6*	2.93 *74.4*	4.37 *111.0*	1.85 *47.0*	36	1.4 *0.6*
2 *50*	65LRTRI3020	66LRTRI3020	2.375 *60.3*	1/16 *1.6*	3.44 *87.4*	4.80 *121.9*	1.85 *47.0*	30	1.7 *0.8*
2-1/2 *65*	65LRTRI3024	66LRTRI3024	2.875 *73.0*	1/16 *1.6*	3.96 *100.6*	5.28 *134.1*	1.85 *47.0*	24	2.0 *0.9*
3 *80*	65LRTRI3030	66LRTRI3030	3.500 *88.9*	1/16 *1.6*	4.55 *115.6*	5.91 *150.1*	1.85 *47.0*	20	2.2 *1.0*
4 *100*	65LRTRI3040	66LRTRI3040	4.500 *114.3*	1/8 *3.2*	5.83 *148.1*	7.28 *184.9*	2.01 *51.1*	18	3.4 *1.5*
5 *125*	65LRTRI3050	66LRTRI3050	5.563 *141.3*	1/8 *3.2*	6.87 *174.5*	8.62 *218.9*	2.01 *51.1*	12	4.4 *2.0*
6 *150*	65LRTRI3060	66LRTRI3060	6.625 *168.3*	1/8 *3.2*	8.03 *204.0*	9.76 *247.9*	2.01 *51.1*	10	5.4 *2.4*
8 *200*	65LRTRI3080	66LRTRI3080	8.625 *219.1*	1/8 *3.2*	10.16 *258.1*	12.52 *318.0*	2.52 *64.0*	-	10.5 *4.8*

Reducing Coupling

Fig. 65RC & 66RC

Reducing Coupling

- Maximum working pressure 300 psi (20.7 bar) depending on coupling size and schedule of pipe
- All housings, gaskets and bolts identified by SCI logo
- 100% magnetic particle inspection of each bolt
- Each bolt has a minimum tensile strength of 110,000 psi
- Gasket Grade E - EPDM (green stripe) -30˚F (-34˚C) to +230˚F (+110˚C)
- Gasket Grade T - Nitrile (orange stripe) -20˚F (-29˚C) to +180˚F (+82˚C)
- Other gasket materials available by special order
- Ductile iron housings conform to ASTM A-536 Grade 65-45-12
- Groove dimensions to AWWA C-606
- Finishes: Orange enamel paint
  Hot dipped galvanized conforming to ASTM A-153
- Smith-Cooper Warranty only applies to assemblies made with housings, gaskets and bolts carrying the SCI logo

C UL US LISTED

FM APPROVED

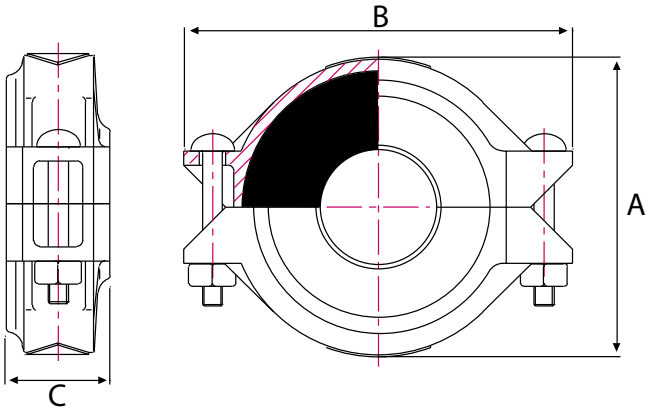

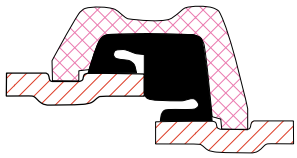

Reducing Gasket

Pipe Size in / *mm*	Part Number Painted	Part Number Galvanized	Max Pipe End Gap in / *mm*	Dimensions A in / *mm*	Dimensions B in / *mm*	Dimensions C in / *mm*	Deflection Degrees	Case Qty	Weight lb / *kg*
2 x 1-1/2 *50 x 40*	65RC3020014	66RC3020014	1/8 *3.2*	3.43 *87.1*	4.88 *124.0*	1.85 *47.0*	2.0°	26	1.9 *0.9*
2-1/2 x 2 *65 x 50*	65RC3024020	66RC3024020	1/8 *3.2*	3.98 *101.1*	5.35 *135.9*	1.85 *47.0*	1.5°	22	2.3 *1.0*
3 x 2 *80 x 50*	65RC3030020	66RC3030020	1/8 *3.2*	4.51 *114.5*	6.34 *161.0*	1.85 *47.0*	1.8°	20	3.1 *1.4*
3 x 2-1/2 *80 x 65*	65RC3030024	66RC3030024	1/8 *3.2*	4.51 *114.5*	6.34 *161.0*	1.85 *47.0*	1.8°	20	3.0 *1.3*
4 x 2 *100 x 50*	65RC3040020	66RC3040020	1/4 *6.4*	5.83 *148.1*	7.52 *191.0*	2.01 *51.1*	1.2°	10	4.8 *2.2*
4 x 2-1/2 *100 x 65*	65RC3040024	66RC3040024	1/4 *6.4*	5.83 *148.1*	7.52 *191.0*	2.01 *51.1*	1.2°	10	4.8 *2.2*
4 x 3 *100 x 80*	65RC3040030	66RC3040030	1/4 *6.4*	5.83 *148.1*	7.52 *191.0*	2.01 *51.1*	1.2°	10	4.4 *2.0*
6 x 4 *150 x 100*	65RC3060040	66RC3060040	1/4 *6.4*	7.99 *202.9*	10.35 *262.9*	2.01 *51.1*	0.9°	-	9.0 *4.1*
8 x 6 *200 x 150*	65RC3080060	66RC3080060	1/4 *6.4*	10.12 *257.0*	13.15 *334.0*	2.48 *63.0*	0.8°	-	14.6 *6.6*

Fig. 65FH & 66FH
Hinged Flange Adapter

- Maximum working pressure 300 psi (20.7 bar) depending on flange size and schedule of pipe
- 3/8" x 2-3/4" latch bolt included
- SCI does not provide flange bolts
- All bolts and gaskets identified by SCI logo
- 100% magnetic particle inspection of each bolt
- Each bolt has a minimum tensile strength of 110,000 psi
- Gasket Grade E - EPDM (green stripe) -30˚F (-34˚C) to +230˚F (+110˚C)
- Gasket Grade T - Nitrile (orange stripe) -20˚F (-29˚C) to +180˚F (+82˚C)
- Ductile iron housings conform to ASTM A-536 Grade 65-45-12
- Groove dimensions to AWWA C-606
- Matches Class 125/150 flange dimensions
- Finishes: Orange enamel paint
  Hot dipped galvanized conforming to ASTM A-153
- Smith-Cooper Warranty only applies to assemblies made with housings, gaskets and bolts carrying the SCI logo

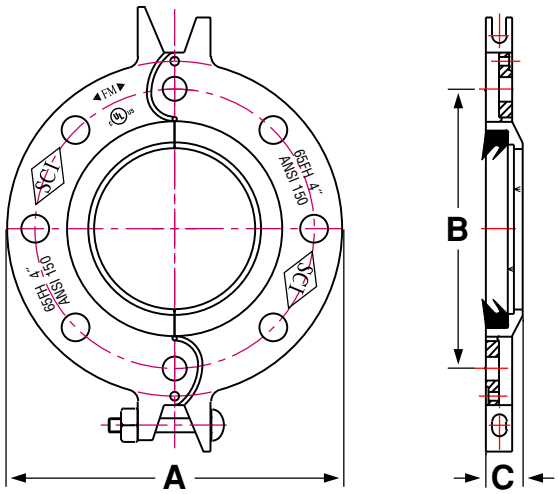

Fig. 65FHR
Phenolic Flange Ring

- For use when mating to a rubber flange seal or wafer-style butterfly valve
- 1/8" thick fabric-reinforced, laminated phenolic
- Available upon request

Phenolic Flange Ring

Pipe Size in / *mm*	Part Number Painted	Part Number Galvanized	Pipe OD in / *mm*	Dimensions A in / *mm*	Dimensions B in / *mm*	Dimensions C in / *mm*	Number of Flange Bolts	Case Qty	Weight lb / *kg*	Part Number Phenolic Flange Ring
2 *50*	65FH3020	66FH3020	2.375 *60.3*	6.00 *152.4*	4.75 *120.7*	0.75 *19.1*	4	10	3.6 *1.6*	65FHR020
2-1/2 *65*	65FH3024	66FH3024	2.875 *73.0*	7.00 *177.8*	5.50 *139.7*	0.88 *22.4*	4	10	3.6 *1.6*	65FHR024
3 *80*	65FH3030	66FH3030	3.500 *88.9*	7.50 *190.5*	6.00 *152.4*	0.94 *23.9*	4	10	4.8 *2.2*	65FHR030
4 *100*	65FH3040	66FH3040	4.500 *114.3*	9.00 *228.6*	7.50 *190.5*	0.94 *23.9*	8	10	6.6 *3.0*	65FHR040
5 *125*	65FH3050	66FH3050	5.563 *141.3*	10.00 *254.0*	8.50 *215.9*	0.94 *23.9*	8	-	8.1 *3.7*	65FHR050
6 *150*	65FH3060	66FH3060	6.625 *168.3*	11.00 *279.4*	9.50 *241.3*	1.00 *25.4*	8	-	8.4 *3.8*	65FHR060
8 *200*	65FH3080	66FH3080	8.625 *219.1*	13.50 *342.9*	11.75 *298.5*	1.12 *28.4*	8	-	14.3 *6.5*	65FHR080
10 *250*	65FH3100	66FH3100	10.750 *273.0*	16.00 *406.4*	14.25 *361.9*	1.19 *30.2*	12	-	19.4 *8.0*	65FHR100
12 *300*	65FH3120	66FH3120	12.750 *323.9*	19.00 *482.6*	17.00 *431.8*	1.25 *31.7*	12	-	28.8 *13.0*	65FHR120

Fig. 65E & 66E
90° Elbow, Standard Radius
- Ductile Iron - Full Flow
- UL/FM – 1-1/4" to 12" only

c UL us LISTED
FM APPROVED

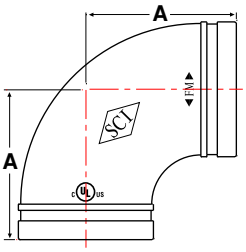

Pipe Size in / *mm*	Part Number Painted	Part Number Galvanized	A in / *mm*	Case Qty	Weight lb / *kg*
1-1/4 *32*	65E 3012	66E 3012	2.75 *69.9*	50	1.0 *0.4*
1-1/2 *40*	65E 3014	66E 3014	2.75 *69.9*	36	1.2 *0.5*
2 *50*	65E 3020	66E 3020	3.25 *82.6*	20	2.1 *0.9*
2-1/2 *65*	65E 3024	66E 3024	3.75 *95.3*	12	2.7 *1.2*
3 *80*	65E 3030	66E 3030	4.25 *108.0*	8	3.8 *1.7*
4 *100*	65E 3040	66E 3040	5.00 *127.0*	8	7.6 *3.4*
5 *125*	65E 3050	66E 3050	5.50 *139.7*	-	10.6 *4.8*
6 *150*	65E 3060	66E 3060	6.50 *165.1*	-	15.7 *7.1*
8 *200*	65E 3080	66E 3080	7.75 *196.9*	-	28.7 *13.0*
10 *250*	65E 3100	66E 3100	9.00 *229.0*	-	50.7 *23.0*
12 *300*	65E 3120	66E 3120	10.00 *254.0*	-	70.1 *31.8*
14 *350*	65E 3140	66E 3140	14.00 *356.0*	-	106.9 *48.5*
16 *400*	65E 3160	66E 3160	16.00 *406.0*	-	158.7 *72.0*

18" through 24" sizes available upon request.

Fig. 65F & 66F
45° Elbow, Standard Radius
- Ductile Iron - Full Flow
- UL/FM – 1-1/4" to 12" only

c UL us LISTED
FM APPROVED

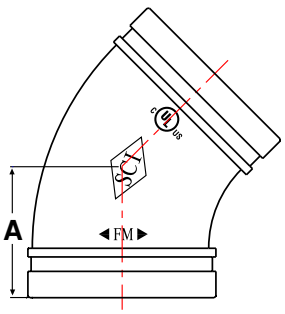

Pipe Size in / *mm*	Part Number Painted	Part Number Galvanized	A in / *mm*	Case Qty	Weight lb / *kg*
1-1/4 *32*	65F 3012	66F 3012	1.75 *44.5*	65	0.7 *0.3*
1-1/2 *40*	65F 3014	66F 3014	1.75 *44.5*	55	0.8 *0.4*
2 *50*	65F 3020	66F 3020	2.00 *50.8*	30	1.5 *0.7*
2-1/2 *65*	65F 3024	66F 3024	2.25 *57.2*	20	2.0 *0.9*
3 *80*	65F 3030	66F 3030	2.50 *63.5*	10	2.8 *1.3*
4 *100*	65F 3040	66F 3040	3.00 *76.2*	6	4.7 *2.2*
5 *125*	65F 3050	66F 3050	3.25 *82.6*	-	7.5 *3.4*
6 *150*	65F 3060	66F 3060	3.50 *88.9*	-	9.8 *4.5*
8 *200*	65F 3080	66F 3080	4.25 *108.0*	-	19.5 *8.8*
10 *250*	65F 3100	66F 3100	4.75 *121.0*	-	30.3 *13.7*
12 *300*	65F 3120	66F 3120	5.25 *133.0*	-	42.7 *19.4*
14 *350*	65F 3140	66F 3140	5.79 *147.0*	-	51.8 *23.5*
16 *400*	65F 3160	66F 3160	6.61 *168.0*	-	72.7 *33.0*

18" through 24" sizes available upon request.

Fig. 65TT & 66TT

22-1/2° Elbow, Standard Radius

- Ductile Iron - Full Flow
- (F) Fabricated Steel - Sch40, Cut Groove

Pipe Size in / *mm*	Part Number Painted	Part Number Galvanized	A in / *mm*	Case Qty	Weight lb / *kg*
1-1/4 *32*	65TT3012	66TT3012	1.75 *44.5*	85	0.7 *0.3*
1-1/2 *40*	65TT3014	66TT3014	1.75 *44.5*	75	0.8 *0.4*
2 *50*	65TT3020	66TT3020	1.88 *47.8*	30	1.2 *0.5*
2-1/2 *65*	65TT3024	66TT3024	2.00 *50.8*	24	1.5 *0.7*
3 *80*	65TT3030	66TT3030	2.25 *57.2*	14	2.3 *1.0*
4 *100*	65TT3040	66TT3040	2.62 *66.5*	16	3.8 *1.7*
5 *125*	65TT3050	66TT3050	2.88 *73.2*	-	5.9 *2.7*
6 *150*	65TT3060	66TT3060	3.12 *79.2*	-	8.2 *3.7*
8 *200*	65TT3080	66TT3080	3.88 *98.6*	-	16.2 *7.3*
10 *250*	65TT3100F	66TT3100F	4.38 *111.2*	-	30.0 *13.6*
12 *300*	65TT3120F	66TT3120F	4.88 *123.9*	-	40.0 *18.1*

14" through 24" sizes available upon request.

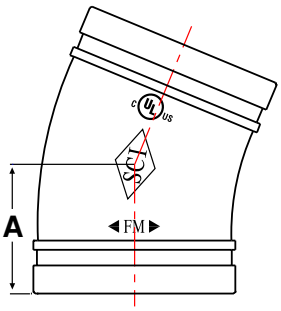

Fig. 65EL & 66EL

11-1/4° Elbow, Standard Radius

- Ductile Iron - Full Flow
- (F) Fabricated Steel - Sch40, Cut Groove

Pipe Size in / *mm*	Part Number Painted	Part Number Galvanized	A in / *mm*	Case Qty	Weight lb / *kg*
1-1/4 *32*	65EL3012	66EL3012	1.37 *34.8*	115	0.6 *0.3*
1-1/2 *40*	65EL3014	66EL3014	1.37 *34.8*	90	0.7 *0.3*
2 *50*	65EL3020	66EL3020	1.37 *34.8*	60	0.8 *0.4*
2-1/2 *65*	65EL3024	66EL3024	1.50 *38.1*	36	1.2 *0.5*
3 *80*	65EL3030	66EL3030	1.50 *38.1*	18	1.6 *0.7*
4 *100*	65EL3040	66EL3040	1.75 *44.5*	24	2.8 *1.3*
5 *125*	65EL3050	66EL3050	2.00 *50.8*	-	4.3 *2.0*
6 *150*	65EL3060	66EL3060	2.00 *50.8*	-	5.5 *2.5*
8 *200*	65EL3080	66EL3080	2.00 *50.8*	-	8.3 *3.8*
10 *250*	65EL3100F	66EL3100F	2.13 *54.1*	-	20.0 *9.1*
12 *300*	65EL3120F	66EL3120F	2.25 *57.1*	-	30.0 *13.6*

14" through 24" sizes available upon request.

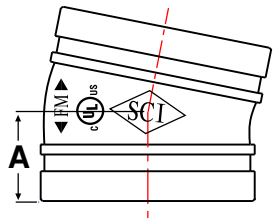

GROOVED

Please see complete installation instructions at www.smithcooper.com for important guidelines and limitations on the use and applications of COOPLOK™ Grooved Couplings and Fittings.

Standard Radius Grooved Fittings

Fig. 65T & 66T
Tee, Standard Radius

- Ductile Iron - Full Flow
- UL/FM – 1-1/4" to 12" only

c UL us LISTED

FM APPROVED

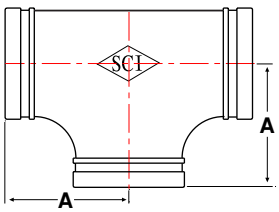

Pipe Size in / *mm*	Part Number Painted	Part Number Galvanized	A in / *mm*	Case Qty	Weight lb / *kg*
1-1/4 *32*	65T 3012	66T 3012	2.75 *69.9*	35	1.4 *0.7*
1-1/2 *40*	65T 3014	66T 3014	2.75 *69.9*	24	1.7 *0.8*
2 *50*	65T 3020	66T 3020	3.25 *82.6*	15	3.1 *1.4*
2-1/2 *65*	65T 3024	66T 3024	3.75 *95.3*	7	4.1 *1.9*
3 *80*	65T 3030	66T 3030	4.25 *108.0*	10	5.8 *2.6*
4 *100*	65T 3040	66T 3040	5.00 *127.0*	5	10.0 *4.5*
5 *125*	65T 3050	66T 3050	5.50 *139.7*	-	15.0 *6.8*
6 *150*	65T 3060	66T 3060	6.50 *165.1*	-	22.3 *10.1*
8 *200*	65T 3080	66T 3080	7.75 *196.9*	-	41.1 *18.6*
10 *250*	65T 3100	66T 3100	9.00 *229.0*	-	64.8 *29.4*
12 *300*	65T 3120	66T 3120	10.00 *254.0*	-	90.9 *41.2*
14 *350*	65T 3140	66T 3140	11.00 *279.0*	-	116.8 *53.0*
16 *400*	65T 3160	66T 3160	12.00 *305.0*	-	145.0 *65.9*

18" through 24" sizes available upon request.

Fig. 65X & 66X
Cross, Standard Radius

- Ductile Iron - Full Flow
- UL/FM – 1-1/4" to 8" only

c UL us LISTED

FM APPROVED

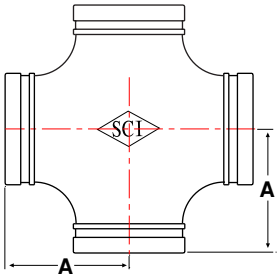

Pipe Size in / *mm*	Part Number Painted	Part Number Galvanized	A in / *mm*	Case Qty	Weight lb / *kg*
1-1/4 *32*	65X 3012	66X 3012	2.75 *69.9*	20	1.8 *0.8*
1-1/2 *40*	65X 3014	66X 3014	2.75 *69.9*	16	2.0 *0.9*
2 *50*	65X 3020	66X 3020	3.25 *82.6*	20	3.3 *1.5*
2-1/2 *65*	65X 3024	66X 3024	3.75 *95.3*	10	4.9 *2.2*
3 *80*	65X 3030	66X 3030	4.25 *108.0*	7	7.3 *3.3*
4 *100*	65X 3040	66X 3040	5.00 *127.0*	4	10.0 *4.5*
5 *125*	65X 3050	66X 3050	5.50 *139.7*	-	15.3 *6.9*
6 *150*	65X 3060	66X 3060	6.50 *165.1*	-	24.6 *11.1*
8 *200*	65X 3080	66X 3080	7.75 *196.9*	-	41.6 *18.9*

10" through 24" sizes available upon request.

Fig. 65FA & 66FA
Grooved x Flange Adapter

- Ductile Iron
- UL/FM – 2" to 10" only
- Matches Class 125/150 flange dimensions

c UL us LISTED

FM APPROVED

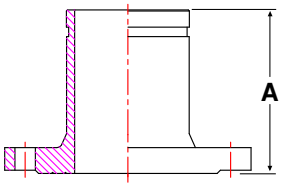

Pipe Size in / *mm*	Part Number Painted	Part Number Galvanized	A in / *mm*	Case Qty	Weight lb / *kg*
2 *50*	65FA3020	66FA3020	4.00 *101.6*	8	4.0 *1.8*
2-1/2 *65*	65FA3024	66FA3024	4.00 *101.6*	5	5.4 *2.5*
3 *80*	65FA3030	66FA3030	4.00 *101.6*	4	6.4 *2.9*
4 *100*	65FA3040	66FA3040	6.00 *152.4*	-	12.7 *5.8*
6 *150*	65FA3060	66FA3060	6.00 *152.4*	-	19.0 *8.6*
8 *200*	65FA3080	66FA3080	6.00 *152.4*	-	28.8 *13.1*
10 *250*	65FA3100	66FA3100	8.00 *203.2*	-	66.0 *30.0*
12 *300*	65FA3120F	66FA3120F	10.00 *254.0*	-	97.0 *44.1*

5" & 14" through 24" sizes available upon request.

Pipe Size in / *mm*	Part Number Painted	Part Number Galvanized	A in / *mm*	Case Qty	Weight lb / *kg*
1-1/4 *32*	65C 3012	66C 3012	0.88 *22.4*	200	0.3 *0.1*
1-1/2 *40*	65C 3014	66C 3014	0.88 *22.4*	140	0.4 *0.2*
2 *50*	65C 3020	66C 3020	0.88 *22.4*	80	0.6 *0.3*
2-1/2 *65*	65C 3024	66C 3024	0.88 *22.4*	60	1.0 *0.5*
3 *80*	65C 3030	66C 3030	0.88 *22.4*	40	1.5 *0.7*
4 *100*	65C 3040	66C 3040	1.00 *25.4*	24	2.6 *1.2*
5 *125*	65C 3050	66C 3050	1.00 *25.4*	12	4.0 *1.8*
6 *150*	65C 3060	66C 3060	1.00 *25.4*	10	5.4 *2.5*
8 *200*	65C 3080	66C 3080	1.19 *30.2*	5	11.5 *5.2*
10 *250*	65C 3100	66C 3100	1.26 *32.0*	-	17.7 *8.0*
12 *300*	65C 3120	66C 3120	1.26 *32.0*	-	23.6 *10.7*

14" through 24" sizes available upon request.

Fig. 65C & 66C
Cap
- Ductile Iron

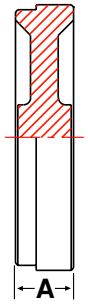

Pipe Size in / *mm*	Part Number Painted	A in / *mm*	Case Qty	Weight lb / *kg*
2 *50*	65CT3020004	0.88 *22.4*	80	0.6 *0.3*
3 *80*	65CT3030004	0.88 *22.4*	40	1.5 *0.7*
4 *100*	65CT3040004	1.00 *25.4*	24	2.6 *1.2*
6 *150*	65CT3060004	1.00 *25.4*	10	5.4 *2.5*
8 *200*	65CT3080004	1.19 *30.2*	5	11.5 *5.2*

Fig. 65CT
Grooved Cap with Center Tap
- Ductile Iron
- 1/2" NPT outlet

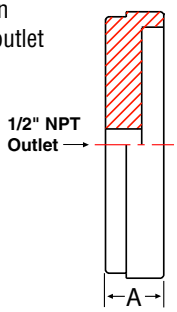

Pipe Size in / *mm*	Part Number Painted	Part Number Galvanized	A in / *mm*	B in / *mm*	Case Qty	Weight lb / *kg*
1-1/4 x 1/2 *32 x 15*	65AE3012004	66AE3012004	1.88 *48.0*	1.75 *44.4*	90	0.6 *0.3*
1-1/4 x 3/4 *32 x 20*	65AE3012006	66AE3012006	1.88 *48.0*	1.75 *44.5*	90	0.6 *0.3*
1-1/4 x 1 *32 x 25*	65AE3012010	66AE3012010	2.02 *51.3*	2.00 *50.8*	75	0.8 *0.3*
1-1/2 x 1/2 *40 x 15*	65AE3014004	66AE3014004	1.88 *48.0*	1.75 *44.4*	69	0.6 *0.3*
1-1/2 x 3/4 *40 x 20*	65AE3014006	66AE3014006	1.88 *48.0*	1.75 *44.4*	69	0.7 *0.3*
1-1/2 x 1 *40 x 25*	65AE3014010	66AE3014010	2.02 *51.3*	2.00 *50.8*	60	0.8 *0.4*
2 x 1/2 *50 x 15*	65AE3020004	66AE3020004	1.88 *48.0*	1.75 *44.4*	45	0.8 *0.4*
2 x 3/4 *50 x 20*	65AE3020006	66AE3020006	1.88 *48.0*	1.75 *44.4*	45	0.9 *0.4*
2 x 1 *50 x 25*	65AE3020010	66AE3020010	2.02 *51.3*	2.00 *50.8*	45	1.0 *0.5*
2-1/2 x 1/2 *65 x 15*	65AE3024004	66AE3024004	1.88 *48.0*	1.97 *50.0*	36	1.0 *0.5*
2-1/2 x 3/4 *65 x 20*	65AE3024006	66AE3024006	1.88 *48.0*	1.97 *50.0*	36	1.1 *0.5*
2-1/2 x 1 *65 x 25*	65AE3024010	66AE3024010	2.02 *51.3*	2.00 *50.8*	36	1.2 *0.5*

Fig. 65AE & 66AE
Adapter Elbow, Grooved x Threaded
- Ductile Iron - Full Flow
- Threads meet ASME B1.20.1

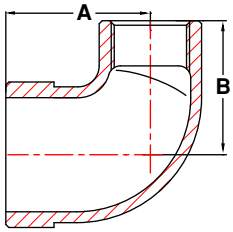

GROOVED

Please see complete installation instructions at www.smithcooper.com for important guidelines and limitations on the use and applications of COOPLOK™ Grooved Couplings and Fittings.

c UL us LISTED FM APPROVED

Fig. 65RT & 66RT
Reducing Tee

- Ductile Iron sizes – Full Flow
- UL/FM – 1-1/2" to 8"
- (F) Fabricated steel fittings – Schedule 40, cut grooved

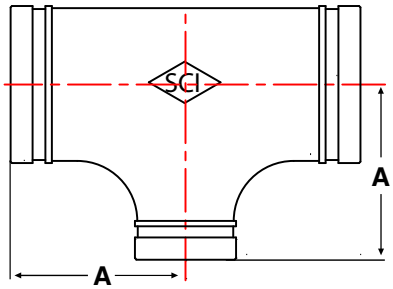

Pipe Size in / *mm*	Part Number Painted	Part Number Galvanized	A in / *mm*	Weight lb / *kg*
1-1/2 x 1-1/4 *40 x 32*	65RT3014012F	66RT3014012F	2.75 *70.0*	1.7 *0.8*
2 x 1-1/4 *50 x 32*	65RT3020012F	66RT3020012F	3.25 *82.6*	2.5 *1.2*
2 x 1-1/2 *50 x 40*	65RT3020014	66RT3020014	3.25 *82.6*	2.6 *1.2*
2-1/2 x 1-1/4 *65 x 32*	65RT3024012F	66RT3024012F	3.75 *95.3*	4.1 *1.9*
2-1/2 x 1-1/2 *65 x 40*	65RT3024014F	66RT3024014F	3.75 *95.3*	4.5 *2.0*
2-1/2 x 2 *65 x 50*	65RT3024020	66RT3024020	3.75 *95.3*	3.5 *1.8*
3 x 1-1/4 *80 x 32*	65RT3030012F	66RT3030012F	4.25 *108.0*	6.2 *2.8*
3 x 1-1/2 *80 x 40*	65RT3030014	66RT3030014	4.25 *108.0*	6.1 *2.8*
3 x 2 *80 x 50*	65RT3030020	66RT3030020	4.25 *108.0*	6.4 *2.9*
3 x 2-1/2 *80 x 65*	65RT3030024	66RT3030024	4.25 *108.0*	5.2 *2.3*
4 x 1-1/4 *100 x 32*	65RT3040012F	66RT3040012F	5.00 *127.0*	9.7 *4.4*
4 x 1-1/2 *100 x 40*	65RT3040014F	66RT3040014F	5.00 *127.0*	10.4 *4.7*
4 x 2 *100 x 50*	65RT3040020	66RT3040020	5.00 *127.0*	8.3 *3.8*
4 x 2-1/2 *100 x 65*	65RT3040024	66RT3040024	5.00 *127.0*	7.9 *3.6*
4 x 3 *100 x 80*	65RT3040030	66RT3040030	5.00 *127.0*	8.1 *3.7*
5 x 1-1/4 *125 x 32*	65RT3050012F	66RT3050012F	5.50 *139.7*	14.5 *6.6*
5 x 1-1/2 *125 x 40*	65RT3050014F	66RT3050014F	5.50 *139.7*	14.7 *6.7*
5 x 2 *125 x 50*	65RT3050020F	66RT3050020F	5.50 *139.7*	14.6 *6.6*
5 x 2-1/2 *125 x 65*	65RT3050024F	66RT3050024F	5.50 *139.7*	14.1 *5.9*
5 x 3 *125 x 80*	65RT3050030F	66RT3050030F	5.50 *139.7*	14.7 *6.2*
5 x 4 *125 x 100*	65RT3050040F	66RT3050040F	5.50 *139.7*	14.7 *6.7*
6 x 1-1/4 *150 x 32*	65RT3060012F	66RT3060012F	6.50 *165.1*	21.1 *9.6*
6 x 1-1/2 *150 x 40*	65RT3060014F	66RT3060014F	6.50 *165.1*	21.2 *9.6*
6 x 2 *150 x 50*	65RT3060020	66RT3060020	6.50 *165.1*	21.5 *9.8*
6 x 2-1/2 *150 x 65*	65RT3060024	66RT3060024	6.50 *165.1*	19.0 *8.6*
6 x 3 *150 x 80*	65RT3060030	66RT3060030	6.50 *165.1*	18.5 *8.4*
6 x 4 *150 x 100*	65RT3060040	66RT3060040	6.50 *165.1*	18.7 *8.5*

Pipe Size in / *mm*	Part Number Painted	Part Number Galvanized	A in / *mm*	Weight lb / *kg*
6 x 5 *150 x 125*	65RT3060050F	66RT3060050F	6.50 *165.1*	26.4 *12.0*
8 x 2 *200 x 50*	65RT3080020F	66RT3080020F	7.75 *196.9*	38.1 *17.3*
8 x 2-1/2 *200 x 65*	65RT3080024F	66RT3080024F	7.75 *196.9*	38.8 *17.6*
8 x 3 *200 x 80*	65RT3080030	66RT3080030	7.75 *196.9*	34.7 *17.9*
8 x 4 *200 x 100*	65RT3080040	66RT3080040	7.75 *196.9*	34.5 *15.7*
8 x 5 *200 x 125*	65RT3080050	66RT3080050	7.75 *196.9*	40.5 *18.3*
8 x 6 *200 x 150*	65RT3080060	66RT3080060	7.75 *196.9*	36.4 *16.5*
10 x 2 *250 x 50*	65RT3100020F	66RT3100020F	9.00 *228.6*	63.5 *28.8*
10 x 2-1/2 *250 x 65*	65RT3100024F	66RT3100024F	9.00 *228.6*	65.1 *29.5*
10 x 3 *250 x 80*	65RT3100030F	66RT3100030F	9.00 *228.6*	66.4 *30.1*
10 x 4 *250 x 100*	65RT3100040F	66RT3100040F	9.00 *228.6*	68.8 *24.3*
10 x 5 *250 x 150*	65RT3100050F	66RT3100050F	9.00 *228.6*	71.7 *32.5*
10 x 6 *250 x 150*	65RT3100060	66RT3100060	9.00 *228.6*	69.5 *31.5*
10 x 8 *250 x 200*	65RT3100080	66RT3100080	9.00 *228.6*	78.2 *35.4*
12 x 2 *300 x 50*	65RT3120020F	66RT3120020F	10.00 *254.0*	84.2 *38.2*
12 x 2-1/2 *300 x 65*	65RT3120024F	66RT3120024F	10.00 *254.0*	85.2 *38.7*
12 x 3 *300 x 80*	65RT3120030F	66RT3120030F	10.00 *254.0*	86.1 *39.1*
12 x 4 *300 x 100*	65RT3120040F	66RT3120040F	10.00 *254.0*	87.7 *39.8*
12 x 5 *300 x 125*	65RT3120050F	66RT3120050F	10.00 *254.0*	89.6 *40.7*
12 x 6 *300 x 150*	65RT3120060F	66RT3120060F	10.00 *254.0*	98.1 *44.5*
12 x 8 *300 x 200*	65RT3120080F	66RT3120080F	10.00 *254.0*	106.1 *48.1*
12 x 10 *300 x 250*	65RT3120100F	66RT3120100F	10.00 *254.0*	116.0 *52.6*
14 x 4 *350 x 100*	65RT3140040F	66RT3140040F	11.00 *279.4*	109.8 *49.8*
14 x 6 *350 x 150*	65RT3140060F	66RT3140060F	11.00 *279.4*	117.4 *53.2*
14 x 8 *350 x 200*	65RT3140080F	66RT3140080F	11.00 *279.4*	126.2 *57.3*
14 x 10 *350 x 250*	65RT3140100F	66RT3140100F	11.00 *279.4*	137.2 *62.2*
14 x 12 *350 x 300*	65RT3140120F	66RT3140120F	11.00 *279.4*	145.6 *66.0*

**Other sizes and configurations available by special order.*

Fig. 65RTT & 66RTT

Reducing Tee - Grooved x Male NPT

- (F) Fabricated steel fittings – all sizes Schedule 40, cut grooved
- UL/FM – 2" to 8"
- Male NPT threads conform to ASME B1.20.1

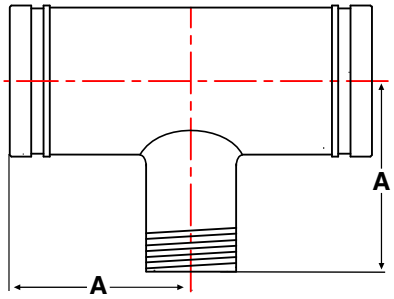

Pipe Size in / *mm*	Part Number Painted	Part Number Galvanized	A in / *mm*	Weight lb / *kg*
2 x 1 *50 x 25*	65RTT3020010F	66RTT3020010F	3.25 *82.6*	2.3 *1.0*
2 x 1-1/4 *50 x 32*	65RTT3020012F	66RTT3020012F	3.25 *82.6*	2.5 *1.1*
2 x 1-1/2 *50 x 40*	65RTT3020014F	66RTT3020014F	3.25 *82.6*	2.5 *1.1*
2-1/2 x 1 *65 x 25*	65RTT3024010F	66RTT3024010F	3.75 *95.3*	4.0 *1.8*
2-1/2 x 1-1/4 *65 x 32*	65RTT3024012F	66RTT3024012F	3.75 *95.3*	4.4 *1.9*
2-1/2 x 1-1/2 *65 x 40*	65RTT3024014F	66RTT3024014F	3.75 *95.3*	4.5 *2.0*
2-1/2 x 2 *65 x 50*	65RTT3024020F	66RTT3024020F	3.75 *95.3*	4.5 *2.0*
3 x 1 *80 x 25*	65RTT3030010F	66RTT3030010F	4.25 *108.0*	6.0 *2.7*
3 x 1-1/4 *80 x 32*	65RTT3030012F	66RTT3030012F	4.25 *108.0*	6.2 *2.8*
3 x 1-1/2 *80 x 40*	65RTT3030014F	66RTT3030014F	4.25 *108.0*	6.3 *2.8*
3 x 2 *80 x 50*	65RTT3030020F	66RTT3030020F	4.25 *108.0*	6.8 *3.1*
3 x 2-1/2 *80 x 65*	65RTT3030024F	66RTT3030024F	4.25 *108.0*	7.1 *3.2*
4 x 1 *100 x 25*	65RTT3040010F	66RTT3040010F	5.00 *127.0*	9.7 *4.3*
4 x 1-1/4 *100 x 32*	65RTT3040012F	66RTT3040012F	5.00 *127.0*	9.7 *4.4*
4 x 1-1/2 *100 x 40*	65RTT3040014F	66RTT3040014F	5.00 *127.0*	10.1 *4.5*
4 x 2 *100 x 50*	65RTT3040020F	66RTT3040020F	5.00 *127.0*	10.8 *4.9*
4 x 2-1/2 *100 x 65*	65RTT3040024F	66RTT3040024F	5.00 *127.0*	10.9 *4.9*
4 x 3 *100 x 80*	65RTT3040030F	66RTT3040030F	5.00 *127.0*	11.5 *5.2*
5 x 2 *125 x 50*	65RTT3050020F	66RTT3050020F	5.50 *139.7*	14.4 *6.5*
5 x 2-1/2 *125 x 65*	65RTT3050024F	66RTT3050024F	5.50 *139.7*	15.1 *6.8*
5 x 3 *125 x 80*	65RTT3050030F	66RTT3050030F	5.50 *139.7*	16.9 *7.7*
5 x 4 *125 x 100*	65RTT3050040F	66RTT3050040F	5.50 *139.7*	17.9 *8.1*
6 x 2 *150 x 50*	65RTT3060020F	66RTT3060020F	6.50 *165.1*	21.8 *9.9*
6 x 2-1/2 *150 x 65*	65RTT3060024F	66RTT3060024F	6.50 *165.1*	22.0 *20.7*

Pipe Size in / *mm*	Part Number Painted	Part Number Galvanized	A in / *mm*	Weight lb / *kg*
6 x 3 *150 x 80*	65RTT3060030F	66RTT3060030F	6.50 *165.1*	22.0 *10.0*
6 x 4 *150 x 100*	65RTT3060040F	66RTT3060040F	6.50 *165.1*	24.7 *11.2*
6 x 5 *150 x 125*	65RTT3060050F	66RTT3060050F	6.50 *165.1*	27.8 *12.6*
8 x 2 *200 x 50*	65RTT3080020F	66RTT3080020F	7.75 *196.9*	37.4 *17.0*
8 x 2-1/2 *200 x 65*	65RTT3080024F	66RTT3080024F	7.75 *196.9*	38.0 *17.2*
8 x 3 *200 x 80*	65RTT3080030F	66RTT3080030F	7.75 *196.9*	38.6 *17.5*
8 x 4 *200 x 100*	65RTT3080040F	66RTT3080040F	7.75 *196.9*	40.5 *18.3*
8 x 5 *200 x 125*	65RTT3080050F	66RTT3080050F	7.75 *196.9*	42.0 *19.0*
8 x 6 *200 x 150*	65RTT3080060F	66RTT3080060F	7.75 *196.9*	51.0 *23.1*
10 x 2 *250 x 50*	65RTT3100020F	66RTT3100020F	9.00 *228.6*	61.8 *28.0*
10 x 3 *250 x 80*	65RTT3100030F	66RTT3100030F	9.00 *228.6*	63.3 *28.7*
10 x 4 *250 x 100*	65RTT3100040F	66RTT3100040F	9.00 *228.6*	64.0 *29.0*
10 x 5 *250 x 125*	65RTT3100050F	66RTT3100050F	9.00 *228.6*	65.1 *29.5*
10 x 6 *250 x 150*	65RTT3100060F	66RTT3100060F	9.00 *228.6*	64.8 *24.9*
10 x 8 *250 x 200*	65RTT3100080F	66RTT3100080F	9.00 *228.6*	64.5 *29.3*
12 x 3 *300 x 80*	65RTT3120030F	66RTT3120030F	10.00 *254.0*	84.5 *38.4*
12 x 4 *300 x 100*	65RTT3120040F	66RTT3120040F	10.00 *254.0*	85.7 *38.9*
12 x 5 *300 x 125*	65RTT3120050F	66RTT3120050F	10.00 *254.0*	87.0 *39.5*
12 x 6 *300 x 150*	65RTT3120060F	66RTT3120060F	10.00 *254.0*	88.2 *40.0*
12 x 8 *300 x 200*	65RTT3120080F	66RTT3120080F	10.00 *254.0*	91.0 *41.3*
12 x 10 *300 x 250*	65RTT3120100F	66RTT3120100F	10.00 *254.0*	94.7 *43.0*
14 x 8 *350 x 200*	65RTT3140080F	66RTT3140080F	11.00 *279.4*	110.0 *50.0*
14 x 10 *350 x 250*	65RTT3140100F	66RTT3140100F	11.00 *279.4*	114.0 *51.8*
14 x 12 *350 x 300*	65RTT3140120F	66RTT3140120F	11.00 *279.4*	117.0 *53.1*

**Other sizes and configurations available by special order.*

GROOVED

Please see complete installation instructions at www.smithcooper.com for important guidelines and limitations on the use and applications of COOPLOK™ Grooved Couplings and Fittings.

Fig. 65CR & 66CR
Concentric Reducer

- Ductile Iron sizes – Full Flow
- UL/FM – 2" to 8"
- (F) Fabricated steel fittings – Schedule 40, cut grooved

c UL us LISTED FM APPROVED

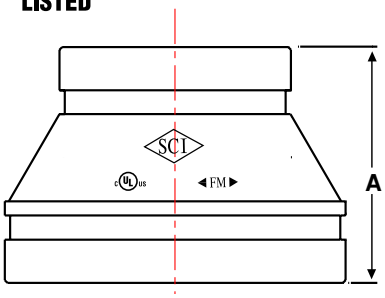

Pipe Size in / *mm*	Part Number Painted	Part Number Galvanized	A in / *mm*	Weight lb / *kg*
2 x 1 *50 x 25*	65CR3020010F	66CR3020010F	2.50 *64.0*	0.8 *0.4*
2 x 1-1/4 *50 x 32*	65CR3020012	66CR3020012	2.50 *64.0*	0.7 *0.3*
2 x 1-1/2 *50 x 40*	65CR3020014	66CR3020014	2.50 *64.0*	0.8 *0.4*
2-1/2 x 1 *65 x 25*	65CR3024010F	66CR3024010F	2.50 *64.0*	1.0 *0.5*
2-1/2 x 1-1/4 *65 x 32*	65CR3024012	66CR3024012	2.50 *64.0*	1.1 *0.50*
2-1/2 x 1-1/2 *65 x 40*	65CR3024014	66CR3024014	2.50 *64.0*	1.0 *0.5*
2-1/2 x 2 *65 x 50*	65CR3024020	66CR3024020	2.50 *64.0*	1.1 *0.5*
3 x 1 *80 x 25*	65CR3030010F	66CR3030010F	2.50 *64.0*	1.3 *0.6*
3 x 1-1/4 *80 x 32*	65CR3030012	66CR3030012	2.50 *64.0*	1.4 *0.6*
3 x 1-1/2 *80 x 40*	65CR3030014	66CR3030014	2.50 *64.0*	1.3 *0.6*
3 x 2 *80 x 50*	65CR3030020	66CR3030020	2.50 *64.0*	1.3 *0.6*
3 x 2-1/2 *80 x 65*	65CR3030024	66CR3030024	2.50 *64.0*	1.4 *0.6*
3-1/2 x 3 *90 x 80*	65CR3034030F	66CR3034030F	2.50 *64.0*	2.8 *1.3*
4 x 1 *100 x 25*	65CR3040010F	66CR3040010F	3.00 *76.2*	2.1 *1.0*
4 x 1-1/4 *100 x 32*	65CR3040012F	66CR3040012F	3.00 *76.2*	1.7 *0.8*
4 x 1-1/2 *100 x40*	65CR3040014	66CR3040014	3.00 *76.2*	2.3 *1.0*
4 x 2 *100 x 50*	65CR3040020	66CR3040020	3.00 *76.2*	2.3 *1.0*
4 x 2-1/2 *100 x 65*	65CR3040024	66CR3040024	3.00 *76.2*	2.5 *1.0*
4 x 3 *100 x 80*	65CR3040030	66CR3040030	3.00 *76.2*	2.4 *1.0*
4 x 3-1/2 *100 x 90*	65CR3040034F	66CR3040034F	3.00 *76.2*	2.8 *1.3*
5 x 2 *125 x 50*	65CR3050020F	66CR3050020F	4.00 *102.1*	2.7 *1.2*
5 x 2-1/2 *125 x 65*	65CR3050024F	66CR3050024F	4.00 *102.1*	3.1 *1.4*
5 x 3 *125 x 80*	65CR3050030	66CR3050030	3.50 *89.0*	3.3 *1.5*

Pipe Size in / *mm*	Part Number Painted	Part Number Galvanized	A in / *mm*	Weight lb / *kg*
5 x 4 *125 x 100*	65CR3050040	66CR3050040	3.50 *89.0*	3.7 *1.7*
6 x 1 *150 x 25*	65CR3060010F	66CR3060010F	4.00 *102.1*	4.1 *1.9*
6 x 1-1/2 *150 x 40*	65CR3060014F	66CR3060014F	4.00 *102.1*	4.3 *2.0*
6 x 2 *150 x 50*	65CR3060020	66CR3060020	4.00 *102.1*	5.5 *2.5*
6 x 2-1/2 *150 x 65*	65CR3060024	66CR3060024	4.00 *102.1*	5.7 *2.6*
6 x 3 *150 x 80*	65CR3060030	66CR3060030	4.00 *102.1*	5.3 *2.4*
6 x 4 *150 x 100*	65CR3060040	66CR3060040	4.00 *102.1*	5.4 *2.5*
6 x 5 *150 x 125*	65CR3060050	66CR3060050	4.00 *102.1*	5.7 *2.6*
8 x 3 *200 x 80*	65CR3080030	66CR3080030	5.00 *127.0*	10.5 *4.8*
8 x 4 *200 x 100*	65CR3080040	66CR3080040	5.0 *127.0*	10.2 *4.6*
8 x 5 *200 x 125*	65CR3080050	66CR3080050	5.00 *127.0*	10.9 *5.0*
8 x 6 *200 x 150*	65CR3080060	66CR3080060	5.00 *127.0*	10.6 *4.8*
10 x 4 *250 x 100*	65CR3100040	66CR3100040	6.00 *152.0*	22.0 *10.0*
10 x 5 *250 x 125*	65CR3100050F	66CR3100050F	6.00 *152.0*	21.7 *9.9*
10 x 6 *250 x 100*	65CR3100060	66CR3100060	6.00 *152.0*	21.3 *9.7*
10 x 8 *250 x 200*	65CR3100080	66CR3100080	6.00 *152.0*	20.7 *9.4*
12 x 6 *300 x 150*	65CR3120060F	66CR3120060F	7.00 *178.0*	26.5 *12.0*
12 x 8 *300 x 200*	65CR3120080F	66CR3120080F	7.00 *178.0*	30.7 *14.0*
12 x 10 *300 x 250*	65CR3120100F	66CR3120100F	7.00 *178.0*	32.2 *14.6*
14 x 6 *350 x 150*	65CR3140060F	66CR3140060F	13.00 *330.2*	94.5 *43.0*
14 x 8 *350 x 200*	65CR3140080F	66CR3140080F	13.00 *330.2*	100.0 *45.5*
14 x 10 *350 x 250*	65CR3140100F	66CR3140100F	13.00 *330.2*	107.0 *48.6*
14 x 12 *350 x 300*	65CR3140120F	66CR3140120F	13.00 *330.2*	113.0 *51.7*

(F) Fabricated fitting "A" dimension may differ from other manufacturers' products.
Other sizes and configurations available by special order.

Fig. 65CRT & 66CRT
Concentric Reducer Male NPT

- (F) Fabricated steel fittings – Schedule 40, cut grooved
- UL/FM – 1-1/2" to 8"
- Male NPT threads conform to ASME B1.20.1

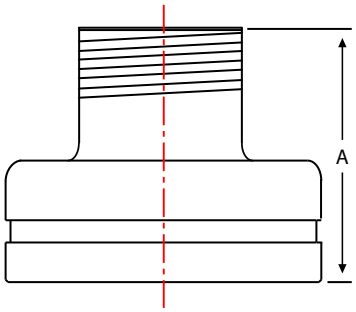

Pipe Size in / *mm*	Part Number Painted	Part Number Galvanized	A in / *mm*	Weight lb / *kg*
1-1/2 x 1 *65 x 25*	65CRT3024010F	66CRT3024010F	3.50 *88.9*	0.6 *0.3*
2 x 1 *50 x 25*	65CRT3020010F	66CRT3020010F	3.50 *88.9*	1.5 *0.7*
2 x 1-1/4 *50 x 32*	65CRT3020012F	66CRT3020012F	3.50 *88.9*	1.5 *0.7*
2 x 1-1/2 *50 x 40*	65CRT3020014F	66CRT3020014F	3.50 *88.9*	1.5 *0.7*
2-1/2 x 1 *65 x 25*	65CRT3024010F	66CRT3024010F	3.75 *95.3*	1.6 *0.7*
2-1/2 x 1-1/4 *65 x 32*	65CRT3024012F	66CRT3024012F	3.75 *95.3*	1.6 *0.7*
2-1/2 x 1-1/2 *65 x 40*	65CRT3024014F	66CRT3024014F	3.75 *95.3*	1.5 *0.7*
2-1/2 x 2 *65 x 50*	65CRT3024020F	66CRT3024020F	3.75 *95.3*	1.7 *0.8*
3 x 1 *80 x 25*	65CRT3030010F	66CRT3030010F	3.75 *95.3*	2.6 *1.1*
3 x 1-1/4 *80 x 32*	65CRT3030012F	66CRT3030012F	3.75 *95.3*	2.7 *1.2*
3 x 1-1/2 *80 x 40*	65CRT3030014F	66CRT3030014F	3.75 *95.3*	2.8 *1.2*
3 x 2 *80 x 50*	65CRT3030020F	66CRT3030020F	3.75 *95.3*	2.7 *1.2*
3 x 2-1/2 *80 x 65*	65CRT3030024F	66CRT3030024F	3.75 *95.3*	2.5 *1.1*
4 x 1 *100 x 25*	65CRT3040010F	66CRT3040010F	4.00 *102.1*	3.6 *1.6*
4 x 1-1/4 *100 x 32*	65CRT3040012F	66CRT3040012F	4.00 *102.1*	3.7 *1.7*
4 x 1-1/2 *100 x40*	65CRT3040014F	66CRT3040014F	4.00 *102.1*	3.8 *1.7*
4 x 2 *100 x 50*	65CRT3040020F	66CRT3040020F	4.00 *102.1*	3.5 *1.6*
4 x 2-1/2 *100 x 65*	65CRT3040024F	66CRT3040024F	4.00 *102.1*	3.8 *1.7*
4 x 3 *100 x 80*	65CRT3040030F	66CRT3040030F	4.00 *102.1*	4.2 *1.9*

Pipe Size in / *mm*	Part Number Painted	Part Number Galvanized	A in / *mm*	Weight lb / *kg*
5 x 4 *125 x 100*	65CRT3050040F	66CRT3050040F	4.25 *108.0*	6.4 *2.9*
6 x 1 *150 x 25*	65CRT3060010F	66CRT3060010F	4.25 *108.0*	7.9 *3.6*
6 x 1-1/4 *150 x 32*	65CRT3060012F	66CRT3060012F	4.25 *108.0*	7.9 *3.6*
6 x 1-1/2 *150 x 40*	65CRT3060014F	66CRT3060014F	4.50 *112.0*	8.1 *3.7*
6 x 2 *150 x 50*	65CRT3060020F	66CRT3060020F	4.50 *112.0*	8.7 *4.0*
6 x 3 *150 x 80*	65CRT3060030F	66CRT3060030F	4.50 *112.0*	9.9 *4.5*
6 x 4 *150 x 100*	65CRT3060040F	66CRT3060040F	4.50 *112.0*	9.9 *4.5*
6 x 5 *150 x 125*	65CRT3060050F	66CRT3060050F	4.50 *112.0*	9.9 *4.5*
8 x 3 *200 x 80*	65CRT3080030F	66CRT3080030F	5.00 *127.0*	14.9 *6.7*
8 x 4 *200 x 100*	65CRT3080040F	66CRT3080040F	5.00 *127.0*	14.8 *6.7*
8 x 5 *200 x 125*	65CRT3080050F	66CRT3080050F	5.00 *127.0*	15.6 *7.0*
8 x 6 *200 x 150*	65CRT3080060F	66CRT3080060F	5.00 *127.0*	18.9 *8.5*
10 x 4 *250 x 100*	65CRT3100040F	66CRT3100040F	6.00 *152.0*	31.9 *14.4*
10 x 5 *250 x 125*	65CRT3100050F	66CRT3100050F	6.00 *152.0*	31.0 *12.74*
10 x 6 *250 x 150*	65CRT3100060F	66CRT3100060F	6.00 *152.0*	31.9 *14.4*
10 x 8 *250 x 200*	65CRT3100080F	66CRT3100080F	6.00 *152.0*	34.3 *15.6*
12 x 4 *300 x 100*	65CRT3120040F	66CRT3120040F	7.00 *178.0*	33.8 *15.4*
12 x 6 *300 x 150*	65CRT3120060F	66CRT3120060F	7.00 *178.0*	38.3 *17.4*
12 x 8 *300 x 200*	65CRT3120080F	66CRT3120080F	7.00 *178.0*	41.3 *18.7*

(F) Fabricated fitting "A" dimension may differ from other manufacturers' products.
Other sizes and configurations available by special order.

Please see complete installation instructions at www.smithcooper.com for important guidelines and limitations on the use and applications of COOPLOK™ Grooved Couplings and Fittings.

Fig. 65ER & 66ER
Eccentric Reducer

- (F) Fabricated steel fittings – Full Flow Schedule 40, cut grooved
- UL/FM – 2" to 8"

c UL us LISTED

FM APPROVED

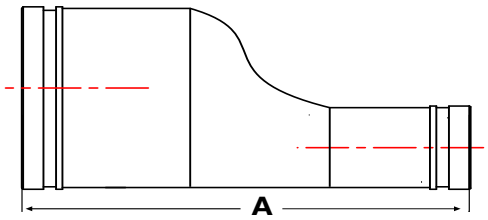

Pipe Size in / *mm*	Part Number Painted	Part Number Galvanized	A in / *mm*	Weight lb / *kg*
2 x 1 *50 x 25*	65ER3020010F	66ER3020010F	9.00 *228.6*	0.8 *0.4*
2 x 1-1/4 *50 x 32*	65ER3020012F	66ER3020012F	9.00 *228.6*	0.9 *0.4*
2 x 1-1/2 *50 x 40*	65ER3020014F	66ER3020014F	9.00 *228.6*	1.0 *0.5*
2-1/2 x 1 *65 x 25*	65ER3024010F	66ER3024010F	9.50 *241.3*	1.0 *0.5*
2-1/2 x 1-1/4 *65 x 32*	65ER3024012F	66ER3024012F	9.50 *241.3*	1.3 *0.6*
2-1/2 x 1-1/2 *65 x 40*	65ER3024014F	66ER3024014F	9.50 *241.3*	0.9 *0.4*
2-1/2 x 2 *65 x 50*	65ER3024020F	66ER3024020F	9.50 *241.3*	1.1 *0.5*
3 x 1 *80 x 25*	65ER3030010F	66ER3030010F	9.50 *241.3*	1.6 *0.7*
3 x 1-1/4 *80 x 32*	65ER3030012F	66ER3030012F	9.50 *241.3*	1.7 *0.8*
3 x 1-1/2 *80 x 40*	65ER3030014F	66ER3030014F	9.50 *241.3*	1.2 *0.5*
3 x 2 *80 x 50*	65ER3030020F	66ER3030020F	9.50 *241.3*	1.5 *0.7*
3 x 2-1/2 *80 x 65*	65ER3030024F	66ER3030024F	9.50 *241.3*	1.5 *0.7*
3-1/2 x 3 *90 x 80*	65ER3034030F	66ER3034030F	9.50 *241.3*	2.8 *1.3*
4 x 1 *100 x 25*	65ER3040010F	66ER3040010F	10.00 *254.0*	2.1 *1.0*
4 x 1-1/4 *100 x 32*	65ER3040012F	66ER3040012F	10.00 *254.0*	1.7 *0.8*
4 x 1-1/2 *100 x40*	65ER3040014F	66ER3040014F	10.00 *254.0*	1.8 *0.8*
4 x 2 *100 x 50*	65ER3040020F	66ER3040020F	10.00 *254.0*	2.0 *0.9*
4 x 2-1/2 *100 x 65*	65ER3040024F	66ER3040024F	10.00 *254.0*	2.3 *1.0*
4 x 3 *100 x 80*	65ER3040030F	66ER3040030F	10.00 *254.0*	2.5 *1.1*
4 x 3-1/2 *100 x 90*	65ER3040034F	66ER3040034F	10.00 *254.0*	2.8 *1.3*
5 x 2 *125 x 50*	65ER3050020F	66ER3050020F	11.00 *279.4*	2.7 *1.2*
5 x 2-1/2 *125 x 65*	65ER3050024F	66ER3050024F	11.00 *279.4*	3.1 *1.4*
5 x 3 *125 x 80*	65ER3050030F	66ER3050030F	11.00 *279.4*	3.3 *1.5*

Pipe Size in / *mm*	Part Number Painted	Part Number Galvanized	A in / *mm*	Weight lb / *kg*
5 x 4 *125 x 100*	65ER3050040F	66ER3050040F	11.00 *279.4*	3.8 *1.7*
6 x 1 *150 x 25*	65ER3060010F	66ER3060010F	11.50 *292.1*	4.1 *1.9*
6 x 1-1/2 *150 x 40*	65ER3060014F	66ER3060014F	11.50 *292.1*	4.3 *2.0*
6 x 2 *150 x 50*	65ER3060020F	66ER3060020F	11.50 *292.1*	3.8 *1.7*
6 x 2-1/2 *150 x 65*	65ER3060024F	66ER3060024F	11.50 *292.1*	5.7 *2.6*
6 x 3 *150 x 80*	65ER3060030F	66ER3060030F	11.50 *292.1*	4.0 *1.8*
6 x 4 *150 x 100*	65ER3060040F	66ER3060040F	11.50 *292.1*	7.1 *3.2*
6 x 5 *150 x 125*	65ER3060050F	66ER3060050F	11.50 *292.1*	8.2 *3.7*
8 x 3 *200 x 80*	65ER3080030F	66ER3080030F	12.00 *304.8*	8.4 *3.8*
8 x 4 *200 x 100*	65ER3080040F	66ER3080040F	12.00 *304.8*	8.3 *3.8*
8 x 5 *200 x 125*	65ER3080050F	66ER3080050F	12.00 *304.8*	9.1 *4.1*
8 x 6 *200 x 150*	65ER3080060F	66ER3080060F	12.00 *304.8*	10.0 *4.5*
10 x 4 *250 x 100*	65ER3100040F	66ER3100040F	13.00 *330.2*	14.9 *6.8*
10 x 5 *250 x 125*	65ER3100050F	66ER3100050F	13.00 *330.2*	11.0 *5.0*
10 x 6 *250 x 150*	65ER3100060F	66ER3100060F	13.00 *330.2*	14.9 *6.8*
10 x 8 *250 x 200*	65ER3100080F	66ER3100080F	13.00 *330.2*	17.3 *7.8*
12 x 6 *300 x 150*	65ER3120060F	66ER3120060F	14.00 *355.6*	16.3 *7.4*
12 x 8 *300 x 200*	65ER3120080F	66ER3120080F	14.00 *355.6*	19.3 *8.8*
12 x 10 *300 x 250*	65ER3120100F	66ER3120100F	14.00 *355.6*	23.0 *10.4*
14 x 6 *350 x 150*	65ER3140060F	66ER3140060F	13.00 *330.2*	96.0 *43.5*
14 x 8 *350 x 200*	65ER3140080F	66ER3140080F	13.00 *330.2*	76.6 *34.7*
14 x 10 *350 x 250*	65ER3140100F	66ER3140100F	13.00 *330.2*	77.6 *35.2*
14 x 12 *350 x 300*	65ER3140120F	66ER3140120F	13.00 *330.2*	89.2 *40.5*

(F) Fabricated fitting "A" dimension may differ from other manufacturers' products.
Other sizes and configurations available by special order.

Pipe Size in / *mm*	Part Number Painted	Part Number Galvanized	A in / *mm*	Weight lb / *kg*
1 *25*	65ELR3010F	66ELR3010F	3.00 *76.0*	1.2 *0.5*
1-1/4 *32*	65ELR3012F	66ELR3012F	3.88 *99.0*	1.4 *0.6*
1-1/2 *40*	65ELR3014F	66ELR3014F	4.25 *108.0*	1.8 *0.8*
2 *50*	65ELR3020F	66ELR3020F	4.38 *111.0*	2.6 *1.2*
2-1/2 *65*	65ELR3024F	66ELR3024F	5.75 *146.0*	5.1 *2.3*
3 *80*	65ELR3030F	66ELR3030F	5.88 *149.0*	6.6 *3.0*
4 *100*	65ELR3040F	66ELR3040F	7.50 *191.0*	11.6 *5.3*
5 *125*	65ELR3050F	66ELR3050F	9.50 *241.0*	20.0 *9.1*
6 *150*	65ELR3060F	66ELR3060F	10.75 *273.0*	29.5 *13.4*
8 *200*	65ELR3080F	66ELR3080F	15.00 *381.0*	62.1 *28.2*
10 *250*	65ELR3100F	66ELR3100F	18.00 *457.0*	103.7 *47.1*
12 *300*	65ELR3120F	66ELR3120F	21.00 *533.0*	147.8 *67.2*
14 *350*	65ELR3140F	66ELR3140F	21.00 *533.0*	159.0 *72.3*
16 *400*	65ELR3160F	66ELR3160F	24.00 *610.0*	211.0 *95.9*
18 *450*	65ELR3180F	66ELR3180F	27.00 *686.0*	269.0 *122.3*
20 *500*	65ELR3200F	66ELR3200F	32.00 *813.0*	332.0 *150.9*
24 *600*	65ELR3240F	66ELR3240F	36.00 *914.0*	470.0 *213.6*

Fig. 65ELR & 66ELR

90° Long Radius Elbow – 1-1/2 D

- (F) Fabricated steel fittings – Full Flow (all sizes) Schedule 40, cut grooved

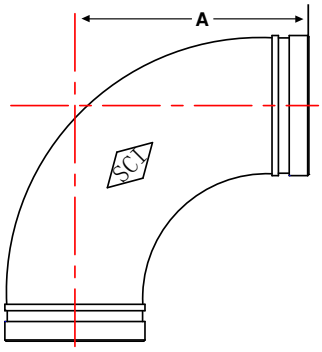

Pipe Size in / *mm*	Part Number Painted	Part Number Galvanized	A in / *mm*	Weight lb / *kg*
1 *25*	65FLR3010F	66FLR3010F	2.50 *64.0*	0.9 *0.4*
1-1/4 *32*	65FLR3012F	66FLR3012F	2.50 *64.0*	1.1 *0.5*
1-1/2 *40*	65FLR3014F	66FLR3014F	2.50 *64.0*	1.3 *0.6*
2 *50*	65FLR3020F	66FLR3020F	2.75 *70.0*	2.2 *1.0*
2-1/2 *65*	65FLR3024F	66FLR3024F	3.00 *76.0*	3.4 *1.5*
3 *80*	65FLR3030F	66FLR3030F	3.38 *86.0*	5.2 *2.4*
4 *100*	65FLR3040F	66FLR3040F	4.00 *102.0*	10.0 *4.5*
5 *125*	65FLR3050F	66FLR3050F	5.00 *127.0*	13.2 *6.0*
6 *150*	65FLR3060F	66FLR3060F	5.50 *140.0*	18.1 *8.2*
8 *200*	65FLR3080F	66FLR3080F	7.25 *184.0*	35.0 *15.9*
10 *250*	65FLR3100F	66FLR3100F	8.50 *216.0*	59.0 *26.8*
12 *300*	65FLR3120F	66FLR3120F	10.00 *254.0*	102.0 *46.4*
14 *350*	65FLR3140F	66FLR3140F	8.75 *222.0*	122.0 *55.5*
16 *400*	65FLR3160F	66FLR3160F	10.00 *254.0*	134.0 *60.9*
18 *450*	65FLR3180F	66FLR3180F	11.25 *286.0*	133.0 *60.5*
20 *500*	65FLR3200F	66FLR3200F	12.50 *318.0*	165.0 *75.0*
24 *600*	65FLR3240F	66FLR3240F	15.00 *381.0*	237.0 *107.7*

Fig. 65FLR & 66FLR

45° Long Radius Elbow – 1-1/2 D

- (F) Fabricated steel fittings – Full Flow (all sizes) Schedule 40, cut grooved

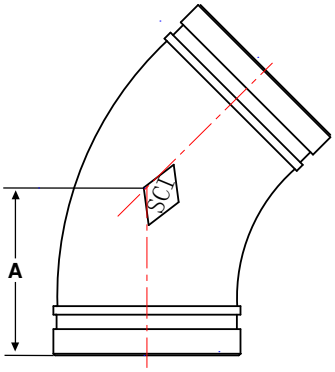

3D, 5D & 6D Long Radius Fittings available on request.

GROOVED

Grooved Wye & Lateral Fittings

Fig. 65Y & 66Y
True Wye

- (F) Fabricated steel fittings – all sizes Schedule 40, cut grooved

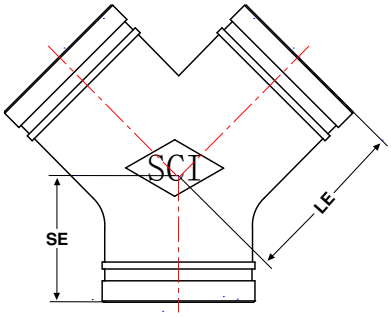

Pipe Size in / *mm*	Part Number Painted	Part Number Galvanized	LE in / *mm*	SE in / *mm*	Weight lb / *kg*
1 *25*	65Y3010F	66Y3010F	2.75 *70.0*	2.50 *64.0*	1.0 *0.5*
1-1/4 *32*	65Y3012F	66Y3012F	2.75 *70.0*	2.50 *64.0*	1.5 *0.7*
1-1/2 *40*	65Y3014F	66Y3014F	2.75 *70.0*	2.75 *70.0*	1.8 *0.8*
2 *50*	65Y3020F	66Y3020F	3.25 *83.0*	2.75 *70.0*	2.4 *1.1*
2-1/2 *65*	65Y3024F	66Y3024F	3.75 *95.0*	3.00 *76.0*	4.9 *2.2*
3 *80*	65Y3030F	66Y3030F	4.25 *108.0*	3.25 *83.0*	5.9 *2.8*
4 *100*	65Y3040F	66Y3040F	5.00 *127.0*	3.75 *95.0*	10.2 *4.5*
5 *125*	65Y3050F	66Y3050F	5.50 *140.0*	4.00 *102.0*	14.7 *6.8*
6 *150*	65Y3060F	66Y3060F	6.50 *165.0*	4.50 *114.0*	20.2 *9.2*
8 *200*	65Y3080F	66Y3080F	7.75 *197.0*	6.00 *152.0*	34.5 *15.7*
10 *250*	65Y3100F	66Y3100F	9.00 *229.0*	6.50 *165.0*	48.0 *21.8*
12 *300*	65Y3120F	66Y3120F	10.00 *254.0*	7.00 *178.0*	84.8 *38.5*
14 *350*	65Y3140F	66Y3140F	11.00 *279.0*	7.50 *191.0*	101.0 *45.9*
16 *400*	65Y3160F	66Y3160F	12.00 *305.0*	8.00 *203.0*	125.0 *56.8*
18 *450*	65Y3180F	66Y3180F	15.50 *394.0*	8.50 *216.0*	180.0 *81.8*
20 *500*	65Y3200F	66Y3200F	17.25 *438.0*	9.00 *229.0*	217.0 *98.6*
24 *600*	65Y3240F	66Y3240F	20.00 *508.0*	10.00 *254.0*	298.0 *135.5*

Fig. 65LY & 66LY
45° Lateral

- (F) Fabricated steel fittings – all sizes Schedule 40, cut grooved

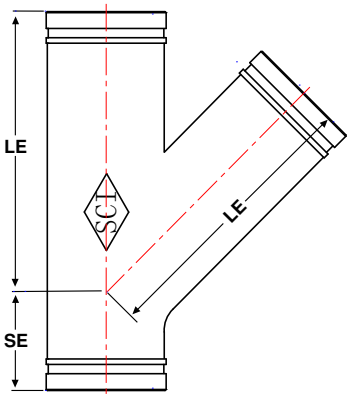

Pipe Size in / *mm*	Part Number Painted	Part Number Galvanized	LE in / *mm*	SE in / *mm*	Weight lb / *kg*
1 *25*	65LY3010F	66LY3010F	5.00 *127.0*	2.25 *57.0*	1.5 *0.7*
1-1/4 *32*	65LY3012F	66LY3012F	5.75 *146.0*	2.50 *64.0*	2.2 *1.0*
1-1/2 *40*	65LY3014F	66LY3014F	6.25 *159.0*	2.75 *70.0*	3.2 *1.5*
2 *50*	65LY3020F	66LY3020F	7.00 *178.0*	2.75 *70.0*	4.4 *2.0*
2-1/2 *65*	65LY3024F	66LY3024F	7.75 *197.0*	3.00 *76.0*	9.8 *4.5*
3 *80*	65LY3030F	66LY3030F	8.50 *216.0*	3.25 *83.0*	11.0 *5.0*
4 *100*	65LY3040F	66LY3040F	10.50 *267*	3.75 *95.0*	18.0 *8.2*
5 *125*	65LY3050F	66LY3050F	12.50 *318.0*	4.00 *102.0*	28.5 *13.0*
6 *150*	65LY3060F	66LY3060F	14.00 *356.0*	4.50 *114.0*	39.0 *17.7*
8 *200*	65LY3080F	66LY3080F	18.00 *457.0*	6.00 *152.0*	81.8 *37.2*
10 *250*	65LY3100F	66LY3100F	20.50 *521.0*	6.50 *165.0*	127.0 *57.7*
12 *300*	65LY3120F	66LY3120F	23.00 *584.0*	7.00 *178.0*	157.0 *71.4*
14 *350*	65LY3140F	66LY3140F	26.50 *673.0*	7.50 *191.0*	201.0 *91.4*
16 *400*	65LY3160F	66LY3160F	29.00 *737.0*	8.00 *203.0*	340.0 *154.5*
18 *450*	65LY3180F	66LY3180F	32.00 *813.0*	8.50 *216.0*	420.0 *190.9*
20 *500*	65LY3200F	66LY3200F	35.00 *889.0*	9.00 *229.0*	515.0 *234.1*
24 *600*	65LY3240F	66LY3240F	40.00 *1016.0*	10.00 *254.0*	930.0 *422.7*

Pipe Size in / mm	Part Number Painted	Part Number Galvanized	A in / mm	Case Qty	Weight lb / kg
2 / 50	65ES3020	66ES3020	2.75 / 69.9	26	1.5 / 0.7
2-1/2 / 65	65ES3024	66ES3024	3.00 / 76.2	16	2.0 / 0.9
3 / 80	65ES3030	66ES3030	3.38 / 85.9	20	2.9 / 1.3
4 / 100	65ES3040	66ES3040	4.00 / 101.6	12	4.6 / 2.1
6 / 150	65ES3060	66ES3060	5.50 / 139.7	-	11.4 / 5.2
8 / 200	65ES3080	66ES3080	6.81 / 173.0	-	22.7 / 10.3

Fig. 65ES & 66ES
90° Elbow, Short Radius
- Ductile Iron - Full Flow

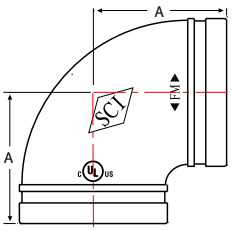

Pipe Size in / mm	Part Number Painted	Part Number Galvanized	A in / mm	Case Qty	Weight lb / kg
2 / 50	65TS3020	66TS3020	2.75 / 69.9	16	2.1 / 0.9
2-1/2 / 65	65TS3024	66TS3024	3.00 / 76.2	12	2.8 / 1.3
3 / 80	65TS3030	66TS3030	3.38 / 85.9	12	4.1 / 1.9
4 / 100	65TS3040	66TS3040	4.00 / 101.6	8	6.6 / 3.0
6 / 150	65TS3060	66TS3060	5.50 / 139.7	-	11.1 / 5.0
8 / 200	65TS3080	66TS3080	6.94 / 176.3	-	16.8 / 7.6

Fig. 65TS & 66TS
Tee, Short Radius
- Ductile Iron - Full Flow

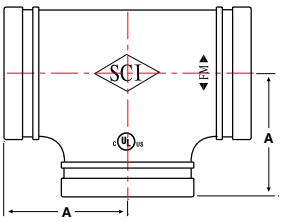

Pipe Size in / mm	Part Number Painted	Part Number Galvanized	A in / mm	Case Qty	Weight lb / kg
2 / 50	65DC3020	66DC3020	0.88 / 22.4	80	0.7 / 0.3
2-1/2 / 65	65DC3024	66DC3024	0.88 / 22.4	60	0.8 / 0.4
3 / 80	65DC3030	66DC3030	0.88 / 22.4	40	1.3 / 0.6
4 / 100	65DC3040	66DC3040	1.00 / 25.4	24	2.1 / 0.9
5 / 125	65DC3050	66DC3050	1.00 / 25.4	12	3.5 / 1.6
6 / 150	65DC3060	66DC3060	1.00 / 25.4	10	4.9 / 2.2
8 / 200	65DC3080	66DC3080	1.20 / 30.5	5	10.1 / 4.6

Fig. 65DC & 66DC
Drain Cap
- Ductile Iron
- 1" NPT drain

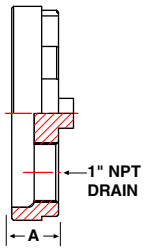

Pipe Size in / mm	Part Number Painted	Part Number Galvanized	A in / mm	B in / mm	C in / mm	Case Qty	Weight lb / kg
2 / 50	65DE3020	66DE3020	3.25 / 82.6	2.76 / 70.0	1.30 / 33.0	20	1.8 / 0.8
2-1/2 / 65	65DE3024	66DE3024	3.75 / 95.3	2.76 / 70.0	1.68 / 42.7	12	2.6 / 1.2
3 / 80	65DE3030	66DE3030	4.25 / 108.0	2.76 / 70.0	2.10 / 53.3	15	3.7 / 1.7
4 / 100	65DE3040	66DE3040	5.00 / 127.0	2.76 / 70.0	2.60 / 66.0	8	5.9 / 2.7
6 / 150	65DE3060	66DE3060	6.50 / 165.1	2.76 / 70.0	3.65 / 92.7	-	13.9 / 6.3
8 / 200	65DE3080	66DE3080	7.75 / 196.9	2.76 / 70.0	4.57 / 116.1	-	26.6 / 12.1

Fig. 65DE & 66DE
Drain Elbow – Standard Radius
- Ductile Iron - Full Flow
- 1" NPT drain

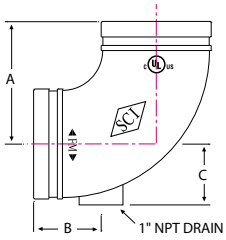

GROOVED

Mechanical Tee

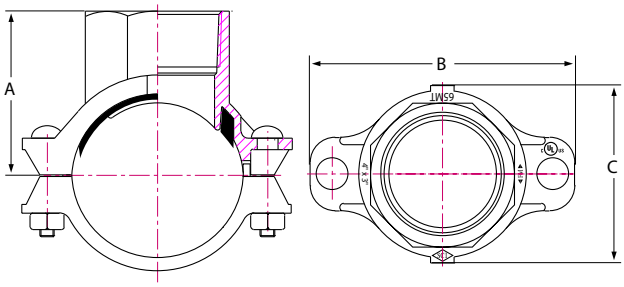

c UL us LISTED

FM APPROVED

Fig. 65MT & 66MT

Mechanical Tee, NPT

- Maximum working pressure 500 psi (34.5 bar) depending on size and schedule of pipe
- ASME B1.20.1 NPT Threads
- Equivalent length in feet of Schedule 40 outlet pipe with a Hazen-Williams coefficient of 120 per UL 213
- All housings, gaskets and bolts identified by SCI logo
- 100% Magnetic Particle inspection of each Bolt
- Each bolt has a minimum tensile strength of 110,000 psi
- Gasket Grade E - EPDM (green stripe) -30˚F (-34˚C) to +230˚F (+110˚C)
- Ductile iron housings conform to ASTM A-536
- Smith-Cooper Warranty only applies to assemblies made with housings, gaskets and bolts carrying the SCI logo

Size Run x Branch in / *mm*	Part Number		Hole Diameter +1/8, -0 / +3.2, -0 in / *mm*	Dimensions			Equivalent Length in Feet	Case Qty	Weight lb / *kg*
	Painted	Galvanized		A in / *mm*	B in / *mm*	C in / *mm*			
2 x 1/2 *50 x 15*	65MT3020004	66MT3020004	1-1/2 *38*	2.50 *64.0*	4.96 *126.0*	2.80 *71.1*	-	24	2.0 *0.9*
2 x 3/4 *50 x 20*	65MT3020006	66MT3020006	1-1/2 *38*	2.50 *64.0*	4.96 *126.0*	2.80 *71.1*	-	24	2.0 *0.9*
2 x 1 *50 x 25*	65MT3020010	66MT3020010	1-1/2 *38*	2.50 *64.0*	4.96 *126.0*	2.80 *71.1*	2	24	2.1 *1.0*
2 x 1-1/4 *50 x 32*	65MT3020012	66MT3020012	1-3/4 *45*	2.80 *70.1*	4.96 *126.0*	2.80 *71.1*	4	24	2.2 *1.0*
2 x 1-1/2 *50 x 40*	65MT3020014	66MT3020014	1-3/4 *45*	2.80 *70.1*	4.96 *126.0*	2.87 *72.9*	9	24	2.2 *1.0*
2-1/2 x 1/2 *65 x 15*	65MT3024004	66MT3024004	1-1/2 *38*	2.80 *70.1*	5.20 *132.1*	2.80 *71.1*	-	24	2.2 *1.0*
2-1/2 x 3/4 *65 x 20*	65MT3024006	66MT3024006	1-1/2 *38*	2.80 *70.1*	5.20 *132.1*	2.80 *71.1*	-	24	2.4 *1.1*
2-1/2 x 1 *65 x 25*	65MT3024010	66MT3024010	1-1/2 *38*	2.80 *70.1*	5.20 *132.1*	2.80 *71.1*	2	20	2.6 *1.2*
2-1/2 x 1-1/4 *65 x 32*	65MT3024012	66MT3024012	1-3/4 *45*	3.00 *75.9*	5.20 *132.1*	3.03 *77.0*	4	20	2.8 *1.3*
2-1/2 x 1-1/2 *65 x 40*	65MT3024014	66MT3024014	2 *51*	3.00 *75.9*	5.20 *132.1*	3.27 *83.1*	9	20	3.0 *1.4*
3 x 1 *80 x 25*	65MT3030010	66MT3030010	1-1/2 *38*	3.10 *78.0*	5.91 *150.1*	2.80 *71.1*	2	10	2.6 *1.2*
3 x 1-1/4 *80 x 32*	65MT3030012	66MT3030012	1-3/4 *45*	3.27 *83.1*	5.91 *150.1*	3.03 *77.0*	4	8	2.9 *1.3*
3 x 1-1/2 *80 x 40*	65MT3030014	66MT3030014	2 *51*	3.50 *88.9*	5.91 *150.1*	3.27 *83.1*	3	8	3.1 *1.4*
3 x 2 *80 x 50*	65MT3030020	66MT3030020	2-1/2 *64*	3.50 *88.9*	5.91 *150.1*	3.78 *96.0*	5	12	3.5 *1.6*
4 x 1 *100 x 25*	65MT3040010	66MT3040010	1-1/2 *38*	3.54 *89.9*	7.09 *180.1*	2.80 *71.1*	2	16	3.0 *1.3*
4 x 1-1/4 *100 x 32*	65MT3040012	66MT3040012	1-3/4 *45*	3.78 *96.0*	7.09 *180.1*	3.03 *77.0*	4	14	3.2 *1.4*
4 x 1-1/2 *100 x 40*	65MT3040014	66MT3040014	2 *51*	4.02 *102.1*	7.09 *180.1*	3.27 *83.1*	3	14	3.4 *1.6*

Fig. 65MT & 66MT
Mechanical Tee, NPT

- Maximum working pressure 500 psi (34.5 bar) depending on size and schedule of pipe
- ASME B1.20.1 NPT threads
- Equivalent length in feet of schedule 40 outlet pipe with a Hazen-Williams coefficient of 120 per UL 213
- All housings, gaskets and bolts identified by SCI logo
- 100% magnetic particle inspection of each bolt
- Each bolt has a minimum tensile strength of 110,000 psi
- Gasket Grade E - EPDM (green stripe) -30˚F (-34˚C) to +230˚F (+110˚C)
- Ductile iron housings conform to ASTM A-536
- Smith-Cooper Warranty only applies to assemblies made with housings, gaskets and bolts carrying the SCI logo

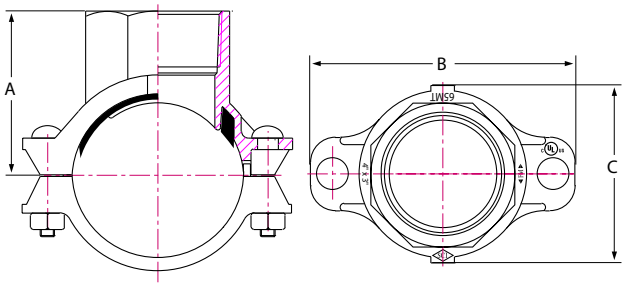

Size Run x Branch in / *mm*	Part Number Painted	Part Number Galvanized	Hole Diameter +1/8, -0 / +3.2, -0 in / *mm*	Dimensions A in / *mm*	Dimensions B in / *mm*	Dimensions C in / *mm*	Equivalent Length in Feet	Case Qty	Weight lb / *kg*
4 x 2 *100 x 50*	65MT3040020	66MT3040020	2-1/2 *64*	4.02 *102.1*	7.24 *183.9*	3.94 *100.1*	5	8	4.4 *2.0*
4 x 2-1/2 *100 x 65*	65MT3040024	66MT3040024	2-3/4 *70*	4.02 *102.1*	7.24 *183.9*	4.21 *106.9*	11	8	4.9 *2.2*
4 x 3 *100 x 80*	65MT3040030	66MT3040030	3-1/2 *89*	4.53 *115.1*	7.24 *183.9*	4.76 *120.9*	13	6	6.1 *2.8*
5 x 1-1/4 *125 x 32*	65MT3050012	66MT3050012	1-3/4 *45*	4.76 *120.9*	7.99 *202.9*	3.03 *77.0*	4	8	4.1 *1.9*
5 x 1-1/2 *125 x 40*	65MT3050014	66MT3050014	2 *51*	4.76 *120.9*	7.99 *202.9*	3.27 *83.1*	3	8	4.2 *1.9*
5 x 2 *125 x 50*	65MT3050020	66MT3050020	2-1/2 *64*	4.76 *120.9*	8.66 *220.0*	3.94 *100.1*	5	6	6.0 *2.7*
5 x 2-1/2 *125 x 65*	65MT3050024	66MT3050024	2-3/4 *70*	4.76 *120.9*	8.66 *220.0*	4.21 *106.9*	11	6	6.6 *3.0*
5 x 3 *125 x 80*	65MT3050030	66MT3050030	3-1/2 *89*	5.00 *127.0*	8.66 *220.0*	4.92 *125.0*	13	4	7.5 *3.4*
6 x 1-1/4 *150 x 32*	65MT3060012	66MT3060012	1-3/4 *45*	5.12 *130.0*	9.13 *231.9*	3.03 *77.0*	4	8	4.4 *2.0*
6 x 1-1/2 *150 x 40*	65MT3060014	66MT3060014	2 *51*	5.12 *130.0*	9.13 *231.9*	3.27 *83.1*	3	8	4.5 *2.0*
6 x 2 *150 x 50*	65MT3060020	66MT3060020	2-1/2 *64*	5.12 *130.0*	9.76 *247.9*	3.94 *100.1*	5	6	6.5 *3.0*
6 x 2-1/2 *150 x 65*	65MT3060024	66MT3060024	2-3/4 *70*	5.12 *130.0*	9.76 *247.9*	4.21 *106.9*	11	6	6.8 *3.1*
6 x 3 *150 x 80*	65MT3060030	66MT3060030	3-1/2 *89*	5.51 *140.0*	9.76 *247.9*	4.92 *125.0*	13	4	7.9 *3.6*
6 x 4 *150 x 100*	65MT3060040	66MT3060040	4-1/2 *114*	5.75 *146.1*	9.76 *247.9*	5.91 *150.1*	15	3	9.6 *4.4*
8 x 2 *200 x 50*	65MT3080020	66MT3080020	2-1/2 *64*	6.26 *159.0*	11.81 *300.0*	3.94 *100.1*	5	4	8.2 *3.7*
8 x 2-1/2 *200 x 65*	65MT3080024	66MT3080024	2-3/4 *70*	6.26 *159.0*	11.81 *300.0*	4.21 *106.9*	11	3	8.6 *3.9*
8 x 3 *200 x 80*	65MT3080030	66MT3080030	3-1/2 *89*	6.50 *165.1*	11.81 *300.0*	4.92 *125.0*	13	3	9.3 *4.2*
8 x 4 *200 x 100*	65MT3080040	66MT3080040	4-1/2 *114*	6.73 *170.9*	11.81 *300.0*	5.91 *150.1*	15	2	10.7 *4.9*

Mechanical Tee, Grooved

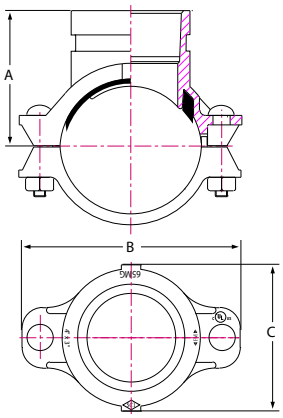

Fig. 65MG & 66MG

Mechanical Tee, Grooved

- Maximum working pressure 500 psi (34.5 bar) depending on size and schedule of pipe
- Equivalent length in feet of schedule 40 outlet pipe with a Hazen-Williams coefficient of 120 per UL 213
- All housings, gaskets and bolts identified by SCI logo
- Gasket Grade E - EPDM (green stripe) -30˚F (-34˚C) to +230˚F (+110˚C)
- Ductile iron housings conform to ASTM A-536
- Groove dimensions to AWWA C-606
- Smith-Cooper Warranty only applies to assemblies made with housings, gaskets and bolts carrying the SCI logo

c UL us LISTED

FM APPROVED

Size Run x Branch in / *mm*	Part Number Painted	Part Number Galvanized	Hole Diameter +1/8, -0 / +3.2, -0 in / *mm*	Dimensions A in / *mm*	Dimensions B in / *mm*	Dimensions C in / *mm*	Equivalent Length in Feet	Case Qty	Weight lb / *kg*
3 x 1-1/4 *80 x 32*	65MG3030012	66MG3030012	1-3/4 *45*	3.50 *89.9*	5.90 *150.1*	3.03 *77.0*	4	10	3.0 *1.4*
3 x 1-1/2 *80 x 40*	65MG3030014	66MG3030014	2 *51*	3.50 *89.9*	5.90 *150.1*	3.30 *83.1*	3	8	3.1 *1.4*
3 x 2 *80 x 50*	65MG3030020	66MG3030020	2-1/2 *64*	3.50 *89.9*	5.90 *150.1*	3.80 *96.0*	5	12	3.6 *1.6*
4 x 1-1/4 *100 x 40*	65MG3040012	66MG3040012	1-3/4 *45*	4.00 *102.1*	7.10 *180.1*	3.03 *77.0*	4	16	3.2 *1.4*
4 x 1-1/2 *100 x 40*	65MG3040014	66MG3040014	2 *51*	4.00 *102.1*	7.10 *180.1*	3.30 *83.1*	3	14	4.3 *1.9*
4 x 2 *100 x 50*	65MG3040020	66MG3040020	2-1/2 *64*	4.02 *102.1*	7.24 *183.9*	3.94 *100.1*	5	8	4.4 *2.0*
4 x 2-1/2 *100 x 65*	65MG3040024	66MG3040024	2-3/4 *70*	4.02 *102.1*	7.24 *183.9*	4.21 *106.9*	11	8	4.9 *2.2*
4 x 3 *100 x 80*	65MG3040030	66MG3040030	3-1/2 *89*	4.53 *115.1*	7.24 *183.9*	4.76 *120.9*	13	8	6.1 *2.8*
5 x 1-1/2 *125 x 40*	65MG3050014	66MG3050014	2 *51*	4.76 *120.9*	7.99 *202.9*	3.27 *83.1*	3	8	4.2 *1.9*
5 x 2 *125 x 50*	65MG3050020	66MG3050020	2-1/2 *64*	4.76 *120.9*	8.66 *220.0*	3.94 *100.1*	5	6	6.0 *2.7*
5 x 2-1/2 *125 x 65*	65MG3050024	66MG3050024	2-3/4 *70*	4.76 *120.9*	8.66 *220.0*	4.21 *106.9*	11	6	6.6 *3.0*
5 x 3 *125 x 80*	65MG3050030	66MG3050030	3-1/2 *89*	5.00 *127.0*	8.66 *220.0*	4.92 *125.0*	13	6	7.5 *3.4*
6 x 1-1/4 *150 x 32*	65MG3060012	66MG3060012	1-3/4 *45*	5.12 *130.0*	9.13 *231.9*	3.03 *77.0*	4	8	4.4 *2.0*
6 x 1-1/2 *150 x 40*	65MG3060014	66MG3060014	2 *51*	5.12 *130.0*	9.13 *231.9*	3.27 *83.1*	3	8	4.5 *2.0*
6 x 2 *150 x 50*	65MG3060020	66MG3060020	2-1/2 *64*	5.12 *130.0*	9.76 *247.9*	3.94 *100.1*	5	6	6.5 *3.0*
6 x 2-1/2 *150 x 65*	65MG3060024	66MG3060024	2-3/4 *70*	5.12 *130.0*	9.76 *247.9*	4.21 *106.9*	11	6	6.8 *3.1*
6 x 3 *150 x 80*	65MG3060030	66MG3060030	3-1/2 *89*	5.51 *140.0*	9.76 *247.9*	4.92 *125.0*	13	5	7.9 *3.6*
6 x 4 *150 x 100*	65MG3060040	66MG3060040	4-1/2 *114*	5.75 *146.1*	9.76 *247.9*	5.91 *150.1*	15	4	9.6 *4.4*
8 x 2 *200 x 50*	65MG3080020	66MG3080020	2-1/2 *64*	6.26 *159.0*	11.81 *300.0*	3.94 *100.1*	5	4	8.2 *3.7*
8 x 2-1/2 *200 x 65*	65MG3080024	66MG3080024	2-3/4 *70*	6.26 *159.0*	11.81 *300.0*	4.21 *106.9*	11	4	8.6 *3.9*
8 x 3 *200 x 80*	65MG3080030	66MG3080030	3-1/2 *89*	6.50 *165.1*	11.81 *300.0*	4.92 *125.0*	13	3	9.3 *4.2*
8 x 4 *200 x 100*	65MG3080040	66MG3080040	4-1/2 *114*	6.73 *170.9*	11.81 *300.0*	5.91 *150.1*	15	3	10.7 *4.9*

Fig. 65MU & 66MU
Strap Tee, NPT

- Maximum working pressure 300 psi (20.7 bar) depending on size and schedule of pipe
- ASME B1.20.1 NPT threads
- Equivalent length in feet of schedule 40 outlet pipe with a Hazen-Williams coefficient of 120 per UL 213
- 1" outlets not listed by UL for direct connection to 1" sprinkler heads
- Gasket Grade E - EPDM (green stripe) -30˚F (-34˚C) to +230˚F (+110˚C)
- Ductile iron housings conform to ASTM A-536
- Smith-Cooper Warranty only applies to assemblies made with housings, gaskets and bolts carrying the SCI logo

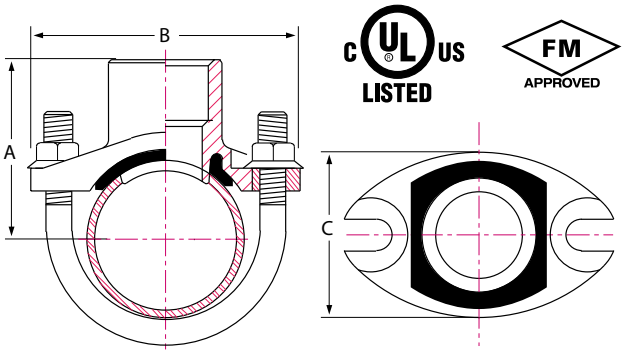

c UL us LISTED

FM APPROVED

Size Run x Branch in / *mm*	Part Number Painted	Part Number Galvanized	Hole Diameter +1/8, -0 / +3.2, -0 in / *mm*	Dimensions A in / *mm*	Dimensions B in / *mm*	Dimensions C in / *mm*	Equivalent Length in Feet	Case Qty	Weight lb / *kg*
1-1/4 x 1/2 *32 x 15*	65MU3012004	66MU3012004	1-1/4 *32*	1.65 *41.9*	3.54 *89.9*	2.28 *57.9*	-	50	0.8 *0.4*
1-1/4 x 3/4 *32 x 20*	65MU3012006	66MU3012006	1-1/4 *32*	1.85 *47.0*	3.54 *89.9*	2.28 *57.9*	-	50	0.9 *0.4*
1-1/4 x 1 *32 x 25*	65MU3012010	66MU3012010	1-1/4 *32*	2.13 *54.1*	3.54 *89.9*	2.28 *57.9*	5	50	1.0 *0.5*
1-1/2 x 1/2 *40 x 15*	65MU3014004	66MU3014004	1-1/4 *32*	1.77 *45.0*	3.54 *89.9*	2.28 *57.9*	-	48	0.8 *0.4*
1-1/2 x 3/4 *40 x 20*	65MU3014006	66MU3014006	1-1/4 *32*	1.97 *50.0*	3.54 *89.9*	2.28 *57.9*	-	48	0.9 *0.4*
1-1/2 x 1 *40 x 25*	65MU3014010	66MU3014010	1-1/4 *32*	2.24 *56.9*	3.54 *89.9*	2.28 *57.9*	5	48	1.0 *0.5*
2 x 1/2 *50 x 15*	65MU3020004	66MU3020004	1-1/4 *32*	2.01 *51.1*	3.74 *95.0*	2.28 *57.9*	-	45	0.8 *0.4*
2 x 3/4 *50 x 20*	65MU3020006	66MU3020006	1-1/4 *32*	2.20 *55.9*	3.74 *95.0*	2.28 *57.9*	-	45	0.9 *0.4*
2 x 1 *50 x 25*	65MU3020010	66MU3020010	1-1/4 *32*	2.48 *63.0*	3.74 *95.0*	2.28 *57.9*	5	45	1.0 *0.5*
2-1/2 x 1/2 *65 x 15*	65MU3024004	66MU3024004	1-1/4 *32*	2.26 *57.4*	4.29 *109.0*	2.28 *57.9*	-	36	1.0 *0.5*
2-1/2 x 3/4 *65 x 20*	65MU3024006	66MU3024006	1-1/4 *32*	2.50 *62.5*	4.29 *109.0*	2.30 *57.9*	-	36	1.1 *0.5*
2-1/2 x 1 *65 x 25*	65MU3024010	66MU3024010	1-1/4 *32*	2.70 *69.6*	4.29 *109.0*	2.30 *57.9*	5	36	1.2 *0.5*

Please see complete installation instructions at www.smithcooper.com for important guidelines and limitations on the use and applications of COOPLOK™ Grooved Couplings and Fittings.

Grooved End Butterfly Valve - Lever Handle & Gear Operator

Fig. 67BFVG
Grooved End Butterfly Valve

- 300 psi working pressure
- EPDM 200° F maximum working temperature
- NBR 180° F maximum working temperature
- 10-Position lever handle or gear operator
- Grease fitting on gear operator
- Upper and lower shafts - Stainless Steel Grade 420 ASTM A-276
- O-Rings - EPDM or NBR
- Handwheel - Ductile Iron
- Lever Handle - ASTM A-536 Ductile Iron
- Lever Handle Lengths - 2" - 6" Valves = 10", 8" Valves = 13"
- Suitable for "Dead End" Service

No.	Part	Material Specification
1	Body	ASTM A-536 Ductile Iron, Epoxy Coated
2	Disc	ASTM A-536 Ductile Iron with either EPDM or NBR Coating

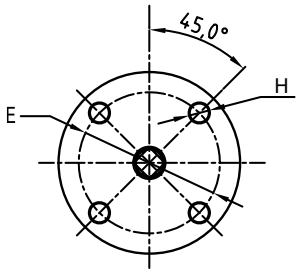

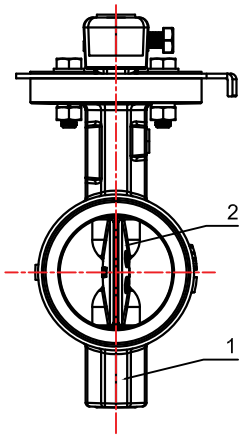

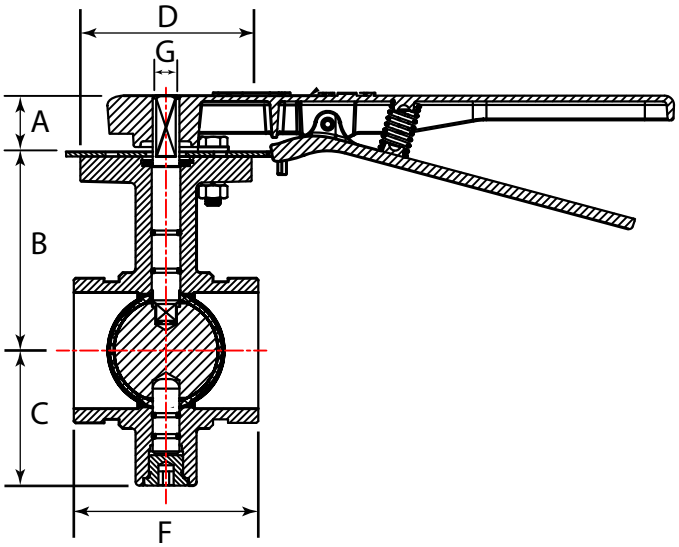

Pipe Size in / *mm*	Part Number EPDM Lever	Part Number EPDM Gear	Part Number NBR Lever	Part Number NBR Gear	A in / *mm*	B in / *mm*	C in / *mm*	D in / *mm*	E in / *mm*	F in / *mm*	G in / *mm*	H in / *mm*	Hand-wheel in / *mm*	Weight w/Lever lb / *kg*	Weight w/Gear lb / *kg*
2 *50*	67BFVGEL020	67BFVGEG020	67BFVGNL020	67BFVGNG020	1.26 *32.0*	4.84 *123.0*	2.17 *55.0*	3.54 *90.0*	2.76 *70.0*	3.19 *81.0*	0.43 *11.0*	0.39 *10.0*	5.75 *146.0*	6.7 *3.0*	11.95 *5.4*
2-1/2 65	67BFVGEL024	67BFVGEG024	67BFVGNL024	67BFVGNG024	1.26 *32.0*	5.00 *127.0*	2.64 *67.0*	3.54 *90.0*	2.76 *70.0*	3.81 *96.8*	0.43 *11.0*	0.39 *10.0*	5.75 *146.0*	7.5 *3.4*	12.75 *5.8*
3 *80*	67BFVGEL030	67BFVGEG030	67BFVGNL030	67BFVGNG030	1.26 *32.0*	4.57 *116.0*	3.07 *78.0*	3.54 *90.0*	2.76 *70.0*	3.81 *96.8*	0.43 *11.0*	0.39 *10.0*	5.75 *146.0*	8.7 *3.9*	13.8 *6.3*
4 *100*	67BFVGEL040	67BFVGEG040	67BFVGNL040	67BFVGNG040	1.26 *32.0*	5.59 *142.0*	3.58 *91.0*	3.54 *90.0*	2.76 *70.0*	4.56 *115.8*	0.55 *14.0*	0.39 *10.0*	5.75 *146.0*	12.2 *5.5*	16.35 *7.4*
5 *125*	67BFVGEL050	67BFVGEG050	67BFVGNL050	67BFVGNG050	1.26 *32.0*	5.87 *149.0*	4.69 *119.0*	3.54 *90.0*	2.76 *70.0*	5.81 *147.6*	0.55 *14.0*	0.39 *10.0*	5.75 *146.0*	17.3 *7.9*	24.0 *10.9*
6 *150*	67BFVGEL060	67BFVGEG060	67BFVGNL060	67BFVGNG060	1.26 *32.0*	6.61 *168.0*	5.31 *135.0*	3.54 *90.0*	2.76 *70.0*	5.81 *147.6*	0.67 *17.0*	0.39 *10.0*	5.75 *146.0*	27.1 *12.3*	41.0 *18.4*
8 *200*	67BFVGEL080	67BFVGEG080	67BFVGNL080	67BFVGNG080	1.57 *40.0*	7.95 *202.0*	6.30 *160.0*	4.92 *125.0*	4.01 *102.0*	5.25 *133.4*	0.67 *17.0*	0.47 *12.0*	11.50 *292.0*	32.5 *14.6*	46.5 *20.9*
10 *250*	-	67BFVGEG100	-	67BFVGNG100	1.57 *40.0*	9.00 *228.6*	7.80 *198.0*	4.92 *125.0*	4.01 *102.0*	6.25 *158.8*	0.87 *22.0*	0.47 *12.0*	11.50 *292.0*	- -	93.0 *41.9*
12 *300*	-	67BFVGEG120	-	67BFVGNG120	1.57 *40.0*	10.50 *266.7*	9.06 *230.0*	4.92 *125.0*	4.01 *102.0*	6.50 *165.1*	0.87 *22.0*	0.47 *12.0*	11.50 *292.0*	- -	111.0 *49.9*

Grooved Swing Check & UL/FM Riser Check Valve

c UL us LISTED

FM APPROVED

Fig. 67CV-A
Grooved Swing Check Valve

- Designed for use in wet pipe systems
- For vertical* or horizontal installation
- 300 psi working pressure
- EPDM or NBR coated disc; brass seat
- Groove dimensions to AWWA C-606
- Fusion bonded epoxy coated interior & exterior
- Color – Black

**Upward flow only.*

Fig. 67CVR-A
UL/FM Grooved Riser Check Valve

- Designed for use in wet pipe fire sprinkler systems
- Factory NPT tapped and plugged for drain and gauge connections
- Gauge connections: 1/2" NPT
- For vertical or horizontal installation
- 300 psi working pressure
- EPDM coated disc; bronze seat
- Groove dimensions to AWWA C-606
- Fusion bonded epoxy coated interior & exterior
- Color – Red

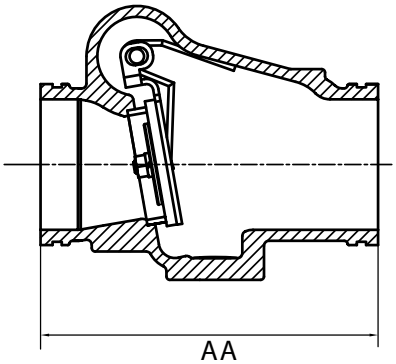

Part	Material	Material Specification
Body	Ductile Iron	ASTM A-536 Grade 65-45-12
Body Seat CV Body Seat CVR	Stainless Steel Bronze	AISI 316 ASTM B62
Disc	Stainless or Ductile Iron	ASTM A-536 Grade 65-45-12
Disc Coating	Vulcanized Rubber	EPDM or NBR**
Shaft	Stainless Steel	AISI 316
Spring	Stainless Steel	AISI 304
Shaft Plug	Stainless Steel	AISI 304
Gasket	Rubber	EPDM or NBR**

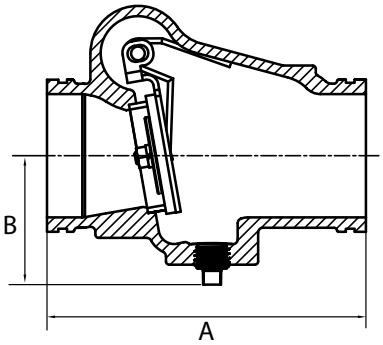

***EPDM or NBR available for Fig. 67CVA only.*

Pipe Size in / *mm*	Part Number Fig. 67CVE-A - EPDM	Fig. 67CVN-A - NBR	Fig. 67CVR-A - EPDM	AA in / *mm*	A in / *mm*	B in / *mm*	Weight lb / *kg*
2 *50*	67CVE3020A	67CVN3020A	-	6.73 *171.0*	7.50 *190.0*	2.50 *63.0*	5.9 *2.7*
2-1/2 *65*	67CVE3024A	67CVN3024A	67CVRE3024A	7.25 *184.0*	7.25 *184.0*	3.50 *89.0*	8.1 *3.7*
3 *80*	67CVE3030A	67CVN3030A	67CVRE3030A	7.75 *197.0*	7.75 *197.0*	3.75 *95.0*	10.6 *4.8*
4 *100*	67CVE3040A	67CVN3040A	67CVRE3040A	8.11 *206.0*	8.11 *206.0*	4.25 *108.0*	17.4 *7.9*
5 *125*	67CVE3050A	67CVN3050A	-	9.76 *248.0*	10.50 *267.0*	4.50 *114.0*	32.0 *14.5*
6 *150*	67CVE3060A	67CVN3060A	67CVRE3060A	11.50 *292.0*	12.75 *324.0*	5.25 *133.0*	36.5 *16.6*
8 *200*	67CVE3080A	67CVN3080A	67CVRE3080A	14.00 *355.0*	14.60 *371.0*	6.25 *160.0*	60.4 *27.4*
10 *250*	67CVE3100A	67CVN3100A	-	18.00 *457.0*	17.00 *432.0*	7.40 *188.0*	134.0 *60.7*
12 *300*	67CVE3120A	67CVN3120A	-	21.00 *533.0*	19.50 *495.0*	8.10 *205.0*	194.0 *88.0*

Fire Protection Grooved End Butterfly Valve

c UL us LISTED

FM APPROVED

Fig. 67BFVGET

Grooved End Butterfly Valve with Indicator

- 300 psi working pressure
- UL Listed
- FM Approved
- California State Fire Marshall Approval No. 7770-2252:0500
- Factory installed replaceable double tamper switch
- Approved for indoor and outdoor use
- Grooved ends
- Gear operated

No.	Part	Materials Specification
1	Body	ASTM A-536 DI, Epoxy Coated
2	Disc	ASTM A-536 DI, EPDM Encapsulated
3	Upper and Lower Stems	AISI Type 431 Stainless Steel
4	Gear Housing	ASTM A-536 Ductile Iron, Zinc Electroplated
5	Hand Wheel	ASTM A-536 Ductile Iron
6	Flag Indicator	ASTM A-536 Ductile Iron
7	O-Rings (All)	EPDM

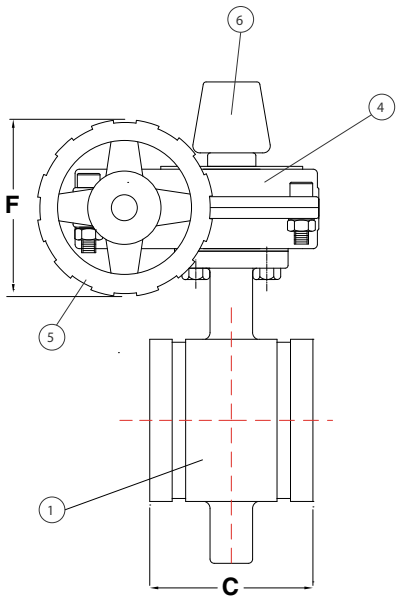

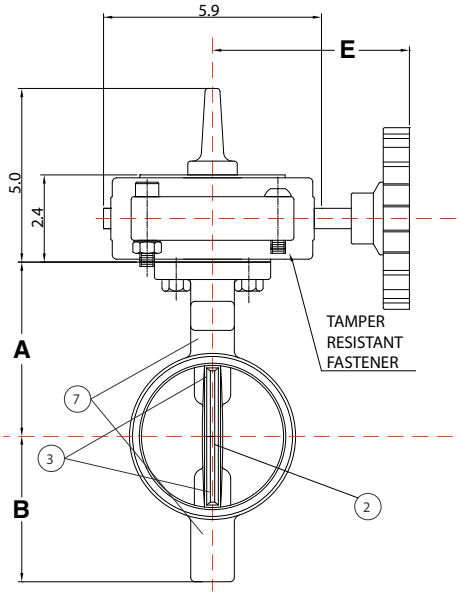

Pipe Size in / *mm*	Part Number	A in / *mm*	B in / *mm*	C in / *mm*	E in / *mm*	F in / *mm*	Weight *lb / kg*
2-1/2 *65*	67BFVGET024	4.02 *102*	2.80 *71*	3.82 *97*	5.28 *134*	5.00 *127.0*	19.0 *8.63*
3 *80*	67BFVGET030	4.29 *109*	3.19 *81*	3.82 *97*	5.28 *134*	5.00 *127.0*	20.4 *9.25*
4 *100*	67BFVGET040	5.04 *128*	3.74 *95*	4.57 *116*	5.28 *134*	5.00 *127.0*	23.6 *10.71*
6 *150*	67BFVGET060	6.02 *153*	5.24 *133*	5.83 *148*	5.28 *134*	8.70 *221.0*	42.4 *19.28*
8 *200*	67BFVGET080	7.24 *184*	6.46 *164*	5.24 *133*	8.27 *210*	8.70 *221.0*	52.6 *23.9*

Fig. 67BFVWET

Wafer End Butterfly Valve with Indicator Flag

- 300 psi working pressure
- UL/ULC Listed
- FM Approved
- California State Fire Marshall Approval No. 7770-2252:0500
- Factory installed replaceable double tamper switch
- Approved for indoor and outdoor use
- Install between (2) Class 125/150 flanges
- Gear operated

No.	Part	Material Specification
1	Body	ASTM A-536 DI, Nylon-11 Coated
2	Disc	ASTM A-536 DI, EPDM Encapsulated
3	Upper & Lower Stems	AISI Type 420 Stainless Steel
4	Input Shaft	AISI Type 410 Stainless Steel
5	Gear Housing	ASTM A-536 Ductile Iron
6	Handwheel	ASTM A-536 Ductile Iron
7	Flag Indicator	ASTM A-536 Ductile Iron
8	Gear Housing Gasket	EPDM
9	O-Rings (All)	EPDM

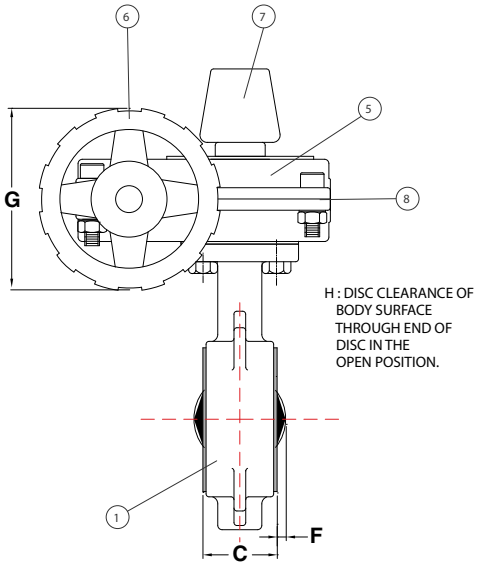

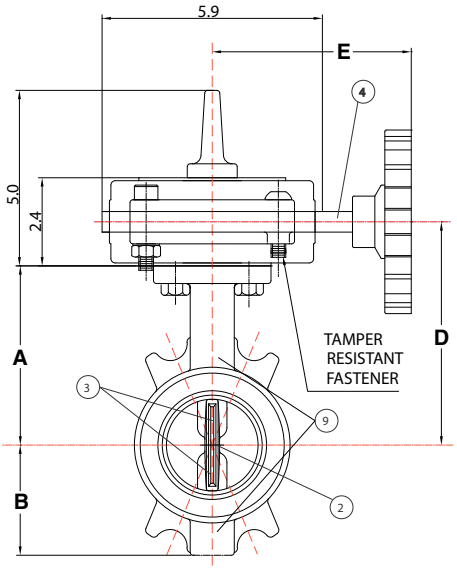

Pipe Size in / *mm*	Part Number	A in / *mm*	B in / *mm*	C in / *mm*	D in / *mm*	E in / *mm*	F in / *mm*	G in / *mm*	Weight *lb / kg*
2-1/2 *65*	67BFVWET024	5.35 *136.0*	3.43 *87.0*	1.81 *46.0*	6.54 *166.0*	5.31 *135.0*	0.32 *8.2*	5.00 *128*	22.0 *10.0*
3 *80*	67BFVWET030	5.63 *143.0*	3.66 *93.0*	1.81 *46.0*	6.81 *173.0*	5.31 *135.0*	0.57 *14.5*	5.00 *128*	23.0 *10.4*
4 *100*	67BFVWET040	6.14 *156.0*	4.29 *109.0*	2.05 *52.0*	7.32 *186.0*	5.31 *135.0*	0.89 *22.7*	5.00 *128*	27.0 *12.2*
6 *150*	67BFVWET060	7.40 *188.0*	5.67 *144.0*	2.20 *56.0*	8.58 *218.0*	8.66 *193.0*	1.79 *45.4*	8.70 *220*	33.0 *15.0*
8 *200*	67BFVWET080	8.74 *222.0*	6.54 *166.0*	2.28 *58.0*	9.92 *252.0*	8.66 *193.0*	2.72 *69.1*	8.70 *220*	45.0 *20.3*

High Pressure Rigid Coupling - Oil Patch

Fig. 65HP

High Pressure Rigid Coupling with "C" Gasket

- Maximum working pressure up to 1000 psi depending on coupling size and schedule of pipe
- All housings, gaskets and bolts identified by SCI logo
- 100% magnetic particle inspection of each bolt
- Each bolt has a minimum tensile strength of 110,000 psi
- Gasket Grade T - Nitrile (double orange stripe) -20˚F (-29˚C) to +180˚F (+82˚C)
- Ductile iron housings conform to ASTM A-536 Grade 65-45-12
- Groove dimensions to AWWA C-606
- Finish: Orange enamel paint
- Smith-Cooper Warranty only applies to assemblies made with housings, gaskets and bolts carrying the SCI logo

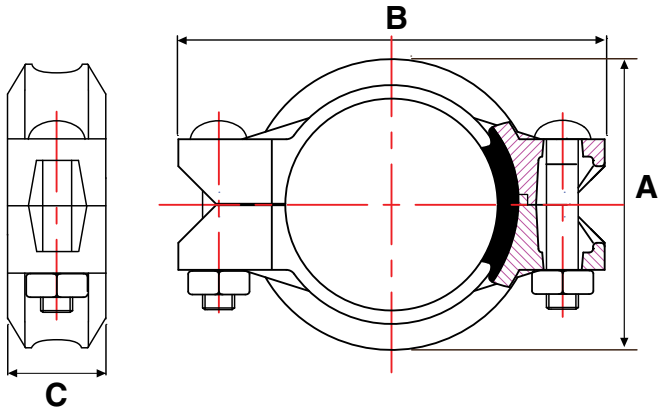

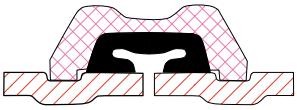

"C" Style Gasket – Nitrile

Pipe Size in / *mm*	Part Number Painted	Pipe OD in / *mm*	Max Pipe End Gap in / *mm*	Dimensions A in / *mm*	Dimensions B in / *mm*	Dimensions C in / *mm*	Max Working Pressure* psi / kPa	Max End Load* lb / *kg*	Case Qty	Weight lb / *kg*
2 *50*	65HPN3020N	2.375 *60.3*	1/8 *3.6*	3.50 *89.0*	5.63 *143.0*	1.89 *48.0*	1000 *6900*	2950 *1340*	15	3.23 *1.5*
3 *80*	65HPN3030N	3.500 *88.9*	1/8 *3.6*	4.69 *119.0*	7.01 *178.0*	1.89 *48.0*	1000 *6900*	6600 *3000*	12	4.63 *2.1*
4 *100*	65HPN3040N	4.500 *114.3*	1/4 *6.4*	5.94 *151.0*	8.70 *221.0*	2.13 *54.0*	1000 *6900*	11920 *5410*	6	8.26 *3.8*
6 *150*	65HPN3060N	6.625 *168.3*	1/4 *6.4*	8.31 *211.0*	11.34 *288.0*	2.28 *58.0*	1000 *6900*	26000 *11800*	–	16.45 *7.5*
8 *200*	65HPN3080N	8.625 *219.1*	1/8 *3.2*	*11.0* *280.0*	*13.7* *348.0*	*2.75* *70.0*	800 *5520*	40000 *18200*	–	26.87 *12.2*

** Maximum working pressure and maximum end load are determined from all internal and external loads, based on standard weight steel pipe, grooved per Smith-Cooper International (SCI) roll or cut grooved specifications.*

Please see complete installation instructions at www.smithcooper.com for important guidelines and limitations on the use and applications of COOPLOK™ Grooved Couplings and Fittings.

Fig. 65HP-ES

High Pressure Coupling with End Shield™ Gasket

- Maximum working pressure up to 2500 psi depending on coupling size and schedule of pipe
- All housings, gaskets and bolts identified by SCI logo
- 100% magnetic particle inspection of each bolt
- Each bolt has a Minimum tensile strength of 110,000 psi
- Gasket Grade T - Nitrile (orange stripe) -20˚F (-29˚C) to +180˚F (+82˚C)
- Ductile iron housings conform to ASTM A-536 Grade 65-45-12
- May only be used with pipe grooves that match ES Groove specifications.
- Finish: Black Enamel Paint
- Smith-Cooper Warranty only applies to assemblies made with housings, gaskets and bolts carrying the SCI logo
- **Extra Heavy "ES" End Shield™ fittings are available (fabricated steel); Schedule 80, cut grooved**
  Contact Smith-Cooper International for fitting types and sizes.

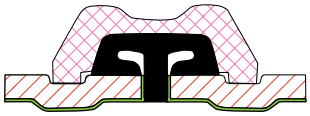

End Shield™ Gasket – Nitrile

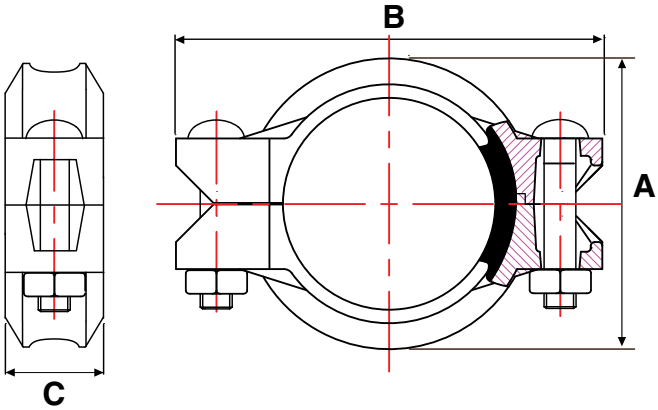

Pipe Size in / *mm*	Part Number Painted	Pipe OD in / *mm*	Max Pipe End Gap in / *mm*	Dimensions A in / *mm*	B in / *mm*	C in / *mm*	Max Working Pressure* psi / kPa	Max End Load* lb / *kg*	Case Qty	Weight lb / *kg*
2 *50*	65HPES3020	2.375 *60.3*	3/16 *4.8*	3.50 *89.0*	5.63 *143.0*	1.89 *48.0*	2500 *17250*	7350 *3340*	15	3.43 *1.5*
3 *80*	65HPES3030	3.500 *88.9*	3/16 *4.8*	4.69 *119.0*	7.01 *178.0*	1.89 *48.0*	2500 *17250*	16500 *7500*	12	4.53 *2.1*
4 *100*	65HPES3040	4.500 *114.3*	3/16 *4.8*	5.94 *151.0*	8.70 *221.0*	2.13 *54.0*	2500 *17250*	28700 *13000*	6	8.17 *3.7*
6 *150*	65HPES3060	6.625 *168.3*	1/4 *6.7*	8.31 *211.0*	11.34 *288.0*	2.28 *58.0*	2000 *13800*	63100 *28600*	–	16.95 *7.7*
8 *200*	65HPE3080N	8.625 *219.1*	1/8 *3.2*	*11.0* *280.0*	*13.7* *348.0*	*2.75* *70.0*	1500 *10350*	75000 *34000*	–	27.2 *12.3*

* *Maximum working pressure and maximum end load are determined from all internal and external loads, based on standard weight steel pipe, grooved per Smith-Cooper International (SCI) End Shield™ (ES) Cut Groove Specifications.*

NOTE:
65HP-ES couplings are not designed for, and cannot be used with, COOPLOK™ Grooved fittings or 67 Series Grooved Butterfly Valves. Refer to End Shield™ (ES) Cut Groove Specifications.

Fig. 65HPE
90° Elbow, Standard Radius
- Ductile Iron - Full Flow
- 1000 psi
- 800 psi 8" only

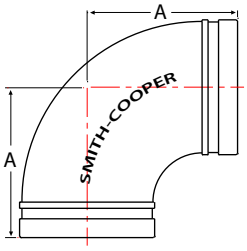

Pipe Size in / *mm*	Part Number	A in / *mm*	Case Qty	Weight lb / *kg*
2 *50*	65HPE1020	3.25 *82.6*	20	1.9 *0.88*
3 *80*	65HPE1030	4.25 *108.0*	8	4.1 *1.88*
4 *100*	65HPE1040	5.00 *127.0*	8	8.0 *3.64*
5 *125*	65HPE1050	5.50 *139.7*	-	16.0 *7.30*
6 *150*	65HPE1060	6.50 *165.1*	-	34.8 *15.80*
8 *200*	65HPE1080	7.75 *196.9*	-	28.7 *13.0*

Fig. 65HPF
45° Elbow, Standard Radius
- Ductile Iron - Full Flow
- 1000 psi
- 800 psi 8" only

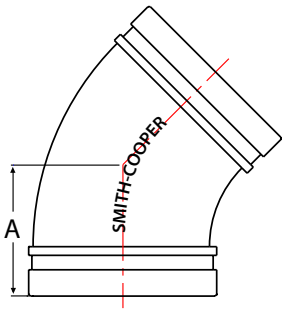

Pipe Size in / *mm*	Part Number	A in / *mm*	Case Qty	Weight lb / *kg*
2 *50*	65HPF1020	2.00 *50.8*	30	1.4 *0.62*
3 *80*	65HPF1030	2.50 *63.5*	10	3.0 *1.34*
4 *100*	65HPF1040	3.00 *76.2*	6	5.9 *2.68*
5 *125*	65HPF1050	3.25 *82.6*	-	12.3 *5.58*
6 *150*	65HPF1060	3.50 *88.9*	-	23.2 *10.52*
8 *200*	65HPF1080	4.25 *108.0*	-	19.5 *8.8*

Fig. 65HPT
Tee, Standard Radius
- Ductile Iron - Full Flow
- 1000 psi
- 800 psi 8" only

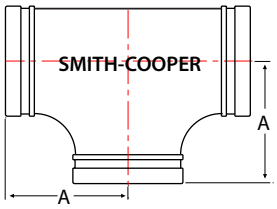

Pipe Size in / *mm*	Part Number	A in / *mm*	Case Qty	Weight lb / *kg*
2 *50*	65HPT1020	3.25 *82.6*	15	3.2 *1.5*
3 *80*	65HPT1030	4.25 *108.0*	10	6.8 *3.1*
4 *100*	65HPT1040	5.00 *127.0*	5	12.1 *5.5*
5 *125*	65HPT1050	5.50 *139.7*	-	29.1 *13.2*
6 *150*	65HPT1060	6.50 *165.1*	-	49.6 *22.5*
8 *200*	65HPT1080	7.75 *196.9*	-	41.1 *18.6*

Pipe Size in / *mm*	Part Number	A in / *mm*	Case Qty	Weight lb / *kg*
6 x 2 *150 x 50*	65HPRT1060020	6.50 *165.1*	-	25.2 *11.42*
6 x 3 *150 x 80*	65HPRT1060030	6.50 *165.1*	-	26.5 *12.02*
6 x 4 *150 x 100*	65HPRT1060040	6.50 *165.1*	-	28.6 *12.96*
8 x 6 *200 x 150*	65HPRT1080060	7.75 *196.9*	-	46.3 *21.00*

Fig. 65HPRT
Reducing Tee, Standard Radius

- Ductile Iron sizes – Full Flow
- 1000 psi
- 800 psi 8" only

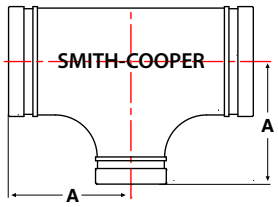

Pipe Size in / *mm*	Part Number	A in / *mm*	Case Qty	Weight lb / *kg*
2-1/2 x 2 *65 x 50*	65HPCR1024020	2.50 *64.0*	-	1.0 *0.48*
3 x 2 *80 x 50*	65HPCR1030020	2.50 *64.0*	-	1.3 *0.58*
4 x 2 *100 x 50*	65HPCR1040020	3.00 *76.2*	-	2.2 *1.01*
4 x 3 *100 x 80*	65HPCR1040030	3.00 *76.2*	-	2.5 *1.12*
6 x 2 *150 x 50*	65HPCR1060020	4.00 *102.1*	-	5.4 *2.44*
6 x 3 *150 x 80*	65HPCR1060030	4.00 *102.1*	-	5.5 *2.50*
6 x 4 *150 x 100*	65HPCR1060040	4.00 *102.1*	-	5.6 *2.54*
8 x 4 *200 x 100*	65HPCR1080040	5.0 *127.0*	-	10.4 *4.70*

Fig. 65HPCR
Concentric Reducer, Standard Radius

- Ductile Iron – Full Flow
- 1000 psi
- 800 psi 8" only

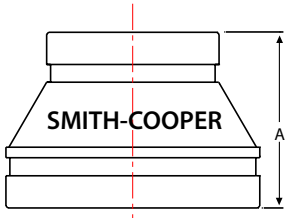

Pipe Size in / *mm*	Part Number	A in / *mm*	Case Qty	Weight lb / *kg*
2 *50*	65HPX1020	3.25 *82.6*	20	3.7 *1.7*
3 *80*	65HPX1030	4.25 *108.0*	7	7.7 *3.5*
4 *100*	65HPX1040	5.00 *127.0*	4	14.8 *6.7*
6 *150*	65HPX1060	6.50 *165.1*	-	32.4 *14.7*
8 *200*	6HPX1080	7.75 *196.9*	-	53.0 *24.0*

Fig. 65HPX
Cross, Standard Radius

- Ductile Iron - Full Flow
- 1000 psi
- 800 psi 8" only

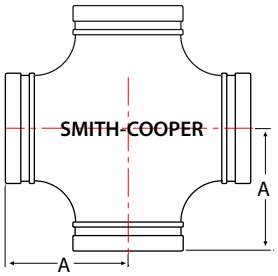

Pipe Size in / *mm*	Part Number	A in / *mm*	Case Qty	Weight lb / *kg*
6 *150*	65HPC1060	1.00 *25.4*	10	6.7 *3.1*
8 *200*	65HPC1080	1.19 *30.2*	5	12.9 *5.9*
6 *150*	65HPCT1060	1.00 *25.4*	10	6.6 *3.0*
8 *200*	65HPCT1080	1.19 *30.2*	5	13.1 *5.8*

Fig. 65HPC / 65HPCT
Cap (w/ tap)

- Ductile Iron
- 1000 psi 6"
- 800 psi 8"

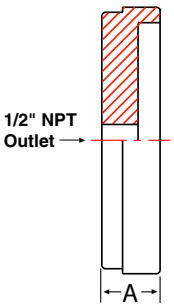

GROOVED OIL

Grooved Butterfly Valves - Oil Patch

Fig. 67LPN
"Low Profile" Grooved Butterfly Valve

- Designed for use in oil, gas and mining services
- Ductile Iron housing
- Carbon Steel body, NBR Elastomer Lined
- 316 Stainless Steel disc
- 2-position cast handle with padlock feature
- 200 psi working pressure
- Color - Black

Part	Material	Material Specification
Housing	Ductile Iron	ASTM A-536, 65-45-12
Body	Carbon Steel	NBR Elastomer Lined
Seat	NBR	
Disc	Stainless Steel	AISI 316
Stem	Stainless Steel	AISI 416
O-Ring	NBR	
Bolt/Nuts	Carbon Steel	Zinc Plated
Handle	Ductile Iron	ASTM A-536, 65-45-12

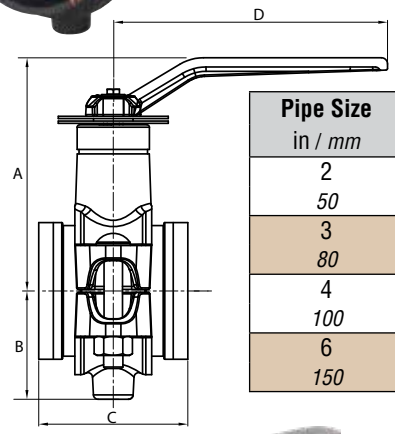

Pipe Size in / *mm*	Part Number	A in / *mm*	B in / *mm*	C in / *mm*	D in / *mm*	Weight lb / *kg*
2 *50*	67LPN2020	4.70 *120.0*	1.90 *48.0*	3.20 *81.0*	5.50 *140.0*	3.80 *1.70*
3 *80*	67LPN2030	5.95 *151.0*	2.75 *70.0*	3.85 *97.0*	7.00 *178.0*	7.45 *3.40*
4 *100*	67LPN2040	7.10 *180.0*	3.50 *89.0*	4.50 *116.0*	9.00 *229.0*	12.50 *5.87*
6 *150*	67LPN2060	9.00 *230.0*	4.50 *114.0*	5.80 *148.0*	12.00 *305.0*	31.10 *14.15*

Fig. 67BFVG
Grooved End Butterfly Valve

- 300 psi working pressure
- NBR 180° F maximum working temperature
- 10-Position lever handle or gear operator
- Grease fitting on gear operator
- Upper and lower shafts - Stainless Steel Grade 420 ASTM A-276
- O-Rings - NBR
- Body - ASTM A-536 Ductile Iron, Epoxy Coated
- Disc - ASTM A-536 Ductile Iron with NBR Coating
- Handwheel - Ductile Iron
- Lever Handle - ASTM A-536 Ductile Iron
- Lever Handle Lengths - 2" - 6" Valves = 10", 8" Valves = 13"
- Suitable for "Dead End" Service

See page 147 for drawings

Pipe Size in / *mm*	Part Number NBR Lever	Part Number NBR Gear	A in / *mm*	B in / *mm*	C in / *mm*	D in / *mm*	E in / *mm*	F in / *mm*	G in / *mm*	H in / *mm*	Hand-wheel in / *mm*	Weight w/Lever lb / *kg*	Weight w/Gear lb / *kg*
2 *50*	67BFVGNL020	67BFVGNG020	1.26 *32.0*	4.84 *123.0*	2.17 *55.0*	3.54 *90.0*	2.76 *70.0*	3.19 *81.0*	0.43 *11.0*	0.39 *10.0*	5.75 *146.0*	6.7 *3.0*	11.95 *5.4*
2-1/2 65	67BFVGNL024	67BFVGNG024	1.26 *32.0*	5.00 *127.0*	2.64 *67.0*	3.54 *90.0*	2.76 *70.0*	3.81 *96.8*	0.43 *11.0*	0.39 *10.0*	5.75 *146.0*	7.5 *3.4*	12.75 *5.8*
3 *80*	67BFVGNL030	67BFVGNG030	1.26 *32.0*	4.57 *116.0*	3.07 *78.0*	3.54 *90.0*	2.76 *70.0*	3.81 *96.8*	0.43 *11.0*	0.39 *10.0*	5.75 *146.0*	8.7 *3.9*	13.8 *6.3*
4 *100*	67BFVGNL040	67BFVGNG040	1.26 *32.0*	5.59 *142.0*	3.58 *91.0*	3.54 *90.0*	2.76 *70.0*	4.56 *115.8*	0.55 *14.0*	0.39 *10.0*	5.75 *146.0*	12.2 *5.5*	16.35 *7.4*
5 *125*	67BFVGNL050	67BFVGNG050	1.26 *32.0*	5.87 *149.0*	4.69 *119.0*	3.54 *90.0*	2.76 *70.0*	5.81 *147.6*	0.55 *14.0*	0.39 *10.0*	5.75 *146.0*	17.3 *7.9*	24.0 *10.9*
6 *150*	67BFVGNL060	67BFVGNG060	1.26 *32.0*	6.61 *168.0*	5.31 *135.0*	3.54 *90.0*	2.76 *70.0*	5.81 *147.6*	0.67 *17.0*	0.39 *10.0*	5.75 *146.0*	27.1 *12.3*	41.0 *18.4*
8 *200*	67BFVGNL080	67BFVGNG080	1.57 *40.0*	7.95 *202.0*	6.30 *160.0*	4.92 *125.0*	4.01 *102.0*	5.25 *133.4*	0.67 *17.0*	0.47 *12.0*	11.50 *292.0*	32.5 *14.6*	46.5 *20.9*
10 *250*	-	67BFVGNG100	1.57 *40.0*	9.00 *228.6*	7.80 *198.0*	4.92 *125.0*	4.01 *102.0*	6.25 *158.8*	0.87 *22.0*	0.47 *12.0*	11.50 *292.0*	- -	93.0 *41.9*
12 *300*	-	67BFVGNG120	1.57 *40.0*	10.50 *266.7*	9.06 *230.0*	4.92 *125.0*	4.01 *102.0*	6.50 *165.1*	0.87 *22.0*	0.47 *12.0*	11.50 *292.0*	- -	111.0 *49.9*

Fig. 67CV-A
Grooved Swing Check Valve

- Designed for use in wet pipe systems
- For vertical* or horizontal installation
- 300 psi working pressure
- NBR coated disc; brass seat
- Groove dimensions to AWWA C-606
- Fusion bonded epoxy coated interior & exterior
- Color – Black

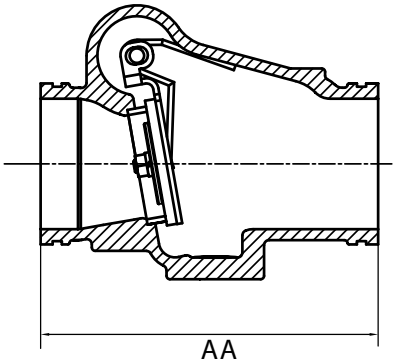

Pipe Size in / *mm*	Part Number Fig. 67CVN-A - NBR	AA in / *mm*	B in / *mm*	Weight lb / *kg*
2 *50*	67CVN3020A	6.73 *171.0*	2.50 *63.0*	5.9 *2.7*
2-1/2 *65*	67CVN3024A	7.25 *184.0*	3.50 *89.0*	8.1 *3.7*
3 *80*	67CVN3030A	7.75 *197.0*	3.75 *95.0*	10.6 *4.8*
4 *100*	67CVN3040A	8.11 *206.0*	4.25 *108.0*	17.4 *7.9*
5 *125*	67CVN3050A	9.76 *248.0*	4.50 *114.0*	32.0 *14.5*
6 *150*	67CVN3060A	11.50 *292.0*	5.25 *133.0*	36.5 *16.6*
8 *200*	67CVN3080A	14.00 *355.0*	6.25 *160.0*	60.4 *27.4*
10 *250*	67CVN3100A	18.00 *457.0*	7.40 *188.0*	134.0 *60.7*
12 *300*	67CVN3120A	21.00 *533.0*	8.10 *205.0*	194.0 *88.0*

Part	Material	Material Specification
Body	Ductile Iron	ASTM A-536 Grade 65-45-12
Body Seat	Brass	ASTM B62 C83600
Disc	Stainless or Ductile Iron	ASTM A-536 Grade 65-45-12
Disc Coating	Vulcanized Rubber	NBR
Shaft	Stainless Steel	AISI 316
Spring	Stainless Steel	AISI 304
Shaft Plug	Stainless Steel	AISI 304
Gasket	Rubber	NBR

Fig. 67CVO
Grooved Swing Check Valve with Bonnet

- Designed for use in oil, gas and mining services
- For horizontal installation only
- Removable bonnet for inline access and service
- 300 psi working pressure
- 316 Stainless Steel disc
- Color – Black

Part	Material	Material Specification
Body	Ductile Iron	ASTM A-536
Disc	Stainless Steel	AISI 316
Bolts	Carbon Steel	ASTM A-183
Gasket	Rubber	NBR

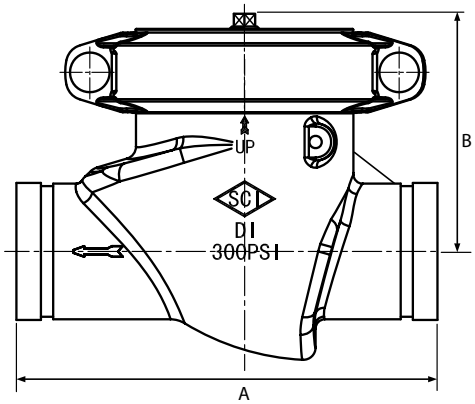

Pipe Size in / *mm*	Part Number	A in / *mm*	B in / *mm*	Weight lb / *kg*
2 *50*	67CVON3020	9.00 *229.0*	5.12 *130.0*	11.00 *5.00*
3 *80*	67CVON3030	10.75 *273.0*	6.00 *152.0*	19.20 *8.73*
4 *100*	67CVON3040	12.00 *305.0*	6.88 *175.0*	33.50 *15.20*
6 *152*	67CVON3060	16.15 *410*	8.86 *225*	52.6 *23.9*

Ball Valve - Oil Patch

Fig. 67GBV
Grooved Ball Valve

- Ductile Iron body, standard port
- NACE Compliant
- 316 Stainless Steel ball and stem
- PTFE body seat
- Viton® B Stem seals
- Lever handle with padlock feature
- Grooved end dimensions to AWWA C-606
- 2" – 4": 1,000 psi working pressure
- 6": 1,500 psi working pressure
- Color - Black

Not for use in potable water systems

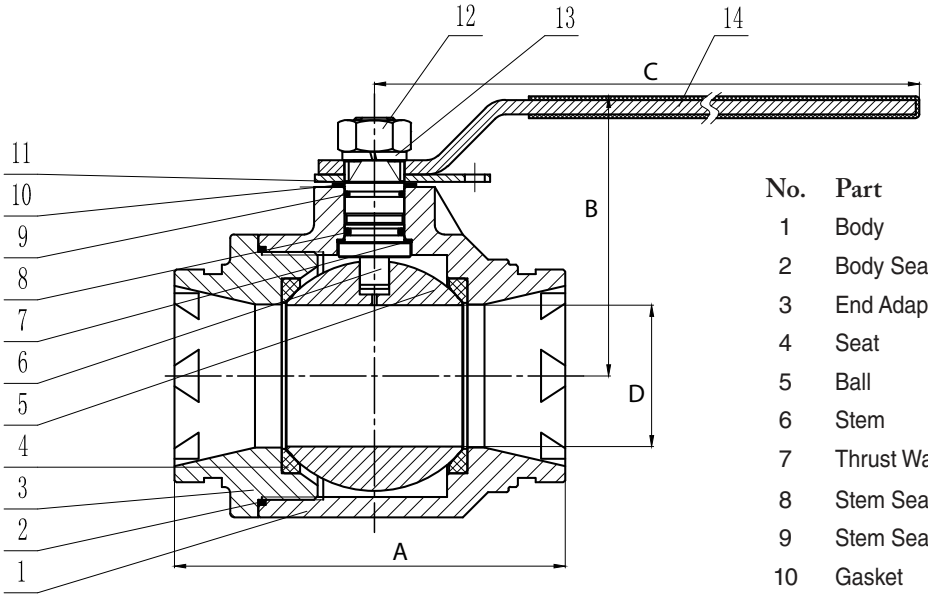

No.	Part	Materials Specification
1	Body	ASTM A395 60-40-18
2	Body Seal	Viton B
3	End Adapter	ASTM A395 60-40-18
4	Seat	PTFE + 15% GF
5	Ball	ASTM A182 F316
6	Stem	ASTM A176 316
7	Thrust Washer	PTFE
8	Stem Seal	Viton B
9	Stem Seal	Viton B
10	Gasket	PTFE
11	Stop Plate	Carbon Steel + Ni
12	Nut	Carbon Steel + Zn
13	Spring Washer	Spring Steel
14	Handle	Carbon Steel

Pipe Size in / *mm*	Part Number	A in / *mm*	B in / *mm*	C in / *mm*	D in / *mm*	Weight lb / *kg*
2 *50*	67GBV1020	5.51 *140.0*	4.29 *109.0*	8.54 *216.9*	1.50 *38.1*	9.5 *4.32*
3 *80*	67GBV1030	6.73 *170.9*	5.57 *141.5*	10.00 *254.0*	2.56 *65.0*	22.2 *10.09*
4 *100*	67GBV1040	8.27 *210.1*	5.92 *150.4*	13.50 *342.9*	3.00 *76.2*	35.7 *16.23*
6 *150*	67GBV1060	10.12 *257.0*	10.13 *257.3*	39.37 *1000.0*	5.00 *127.0*	97.5 *44.32*

Maximum Working Pressures (psi)

Pipe Size Nominal Dia. (in)	Std. Weight Couplings	Lightweight Couplings	HP Couplings 65HP/65HP-ES	Reducing Couplings	Flange Adapters	Standard Radius Fittings	Short Radius Fittings	Drain 90's & Caps	Mech & Strap Tees	Fabricated Fittings
1	1000					1000				300
1-1/4	1000	500				1000	300		300	300
1-1/2	1000	500		300		1000	300		300	300
2	1000	500	1000/2500	300	300	1000	300	300	300	300
2-1/2	1000	500		300	300	1000	300	300	300	300
3	1000	500	1000/2500	300	300	1000	300	300	300	300
4	1000	500	1000/2500	300	300	1000	300	300	300	300
5	1000	500		300	300	1000	300	300	300	300
6	1000	500	1000/2500	300	300	1000	300	300	300	300
8	800	500		300	300	800	300	300	300	300
10	600				300	600				300
12	600				300	600				300
14	300					300				300
16	300					300				300
18	300									300
20	300									300
24	250									250

NOTES: Pressure ratings and end loads for steel pipe are based upon tests performed on pipe prepared to COOPLOK™ Grooved "Standard Roll Groove and Cut Groove Specifications" (see Page 44-46). The maximum working pressure is the maximum line pressure to which a joint should be subjected (including line surge) using a nominal safety factor of 3.

End Loads For Grooved Couplings (lbs)

			65/66LR 65/66LF	65/66SR 65/66SR	65HP	65HP-ES
Pipe Size	Pipe ID	Pipe ID	Max. End Load	Max. End Load	Max. End Load	Max. End Load
Nominal Dia. (in)	(in)	(area)	(lbs)	(lbs)	(lbs)	(lbs)
1	1.049	0.864		864		
1-1/4	1.38	1.496	748	1496		
1-1/2	1.61	2.036	1018	2036		
2	2.06	3.333	1666	3333	2500	8332
2-1/2	2.47	4.792	2396	4792		
3	3.07	7.402	3701	7402	2500	18506
4	4.03	12.756	6378	12756	2500	31889
5	5.05	20.030	10015	20030		
6	6.06	28.843	14421	28843	2000	40059
8	8.00	50.266	25133	40212		
10	10.00	78.540		47124		
12	12.00	113.098		67859		
14	13.25	137.887		41366		
16	15.25	182.655		54796		
18	17.25	233.706		70112		
20	19.00	283.529		85059		
24	23.00	415.477		103869		

Maximum end loads are based on all internal and external forces to which a joint should be subjected based on piping system where couplings are being used.

"C" Type and Triple Seal Gaskets:

1. Check to ensure that gasket is suitable for intended service and that the pipe groove is suitable for the intended coupling.
2. "C" type gasket is pre-lubricated; additional lubrication may be necessary. All other gaskets must be suitably lubricated.
3. Remove any dirt or debris from gasket and pipe ends.
4. Install gasket by placing it over pipe, ensuring that gasket lip does not overhang pipe end.
5. Bring both pipe ends together ensuring and align vertically and horizontally.
6. Slide gasket into position, properly centering between the grooved section of each pipe.
7. Place coupling housings over gasket so that the housing keys are fully engaged into the grooves.
8. Insert bolts into coupling and rotate nuts until finger tight.
9. Wrench-tighten bolts alternately to the torque requirements shown below.

End Shield™ Gaskets:

1. Check to ensure that gasket is suitable for intended service and that the pipe groove is suitable for the intended coupling.
2. "C" type gasket is pre-lubricated; additional lubrication may be necessary. All other gaskets must be suitably lubricated.
3. Remove any dirt or debris from gasket and pipe ends.
4. Insert the pipe end into the gasket until it contacts the gasket's center rib.
5. Bring both pipe ends together and align vertically and horizontally.
6. Insert the second pipe end into the gasket until it contacts the center rib.
7. Place coupling housings over gasket making sure that the tongue and recess areas of the housing mate properly.
8. Insert bolts into coupling and rotate nuts until finger tight.
9. Wrench-tighten bolts alternately to the torque requirements shown below.

Grooved Coupling Bolt Torques

Pipe Size in / *mm*	Standard Flexible 65SF & 66SF ft /lbs / *N/M*	Standard Rigid 65SR & 66SR ft /lbs / *N/M*	Lightweight Flexible 65LF & 66LF ft /lbs / *N/M*	Lightweight Rigid 65LR & 66LR ft /lbs / *N/M*	Reducing Coupling 65RC & 66RC ft /lbs / *N/M*	High Pressure 65HP & 65HP-ES ft /lbs / *N/M*
1 *25*	30 *40*	30 *40*	–	–	–	–
1-1/4 *32*	50 *65*	30 *40*	30 *40*	30 *40*	–	–
1-1/2 *40*	50 *65*	30 *40*	30 *40*	30 *40*	–	–
2 *50*	50 *65*	30 *40*	30 *40*	30 *40*	30 *40*	90 *120*
2-1/2 *65*	50 *65*	50 *65*	30 *40*	30 *40*	50 *65*	–
3 *80*	50 *65*	50 *65*	30 *40*	30 *40*	50 *65*	90 *120*
3-1/2 *90*	90 *120*	50 *65*	50 *65*	30 *40*	–	–
4 *100*	90 *120*	50 *65*	50 *65*	30 *40*	50 *65*	150 *200*
5 *125*	150 *200*	90 *120*	90 *120*	50 *65*	90 *120*	–
6 *150*	150 *200*	90 *120*	90 *120*	50 *65*	90 *120*	200 *270*
8 *200*	200 *270*	150 *200*	150 *200*	90 *120*	150 *200*	–
10 *250*	250 *340*	200 *270*	–	–	–	–
12 *300*	250 *340*	200 *270*	–	–	–	–
14 *350*	250 *340*	200 *270*	–	–	–	–
16 *400*	250 *340*	200 *270*	–	–	–	–
18 *450*	300 *400*	200 *270*	–	–	–	–
20 *500*	300 *400*	250 *340*	–	–	–	–
24 *600*	300 *400*	250 *340*	–	–	–	–

Hinged Flange Adapter

Assembly:

1. Verify that mating flange meets Class 125/150 dimensions.
2. Loosen the latch bolt nut and pull it out of the flange slot. Open the hinged flange and install it on the grooved pipe end with the flange's key section inserted into the pipe groove. The SCI logo must face away from the pipe end.
3. Return the latch bolt into the flange slot. Do not tighten the bolt completely.
4. Check the gasket to ensure that it is suitable for the intended service. Lubricate the exterior of the gasket, using a silicone lubricant or equivalent.
5. Press the hinged flange gasket into the gasket cavity, making sure that the gasket is oriented correctly.
6. Tighten the nut of the latch bolt to the specified bolt torque. The hinged flange housings must overlap completely so a flange bolt can be inserted into the shared hole.
7. The mating flange must be flat, smooth and free of gouges or other indentations. Check that the gasket is still located properly and bring the two flanges together.
8. Starting with the shared holes on the hinged flange, insert flange bolts meeting SAE J429 Grade 5 or higher through both flanges. Hand-tighten nuts onto the bolts and then torque the nuts to the values in the table, keeping the flanges parallel as the nuts are being tightened alternately.

Pipe Size in	Flange Bolt Torque ft/lbs / *N/M*	Latch Bolt Torque ft/lbs / *N/M*
2" - 3"	100 - 130 *135 - 175*	40 *55*
4" - 6"	200 - 250 *270 - 340*	40 *55*
8"	300 - 400 *400 - 540*	40 *55*
10" -12"	400 - 500 *540 -670*	40 *55*

NOTE:
If the Hinged Flange Adapter is being mated to the rubber flange seal or wafer style butterfly valve, the 65FHR (phenolic flange ring) must be used.

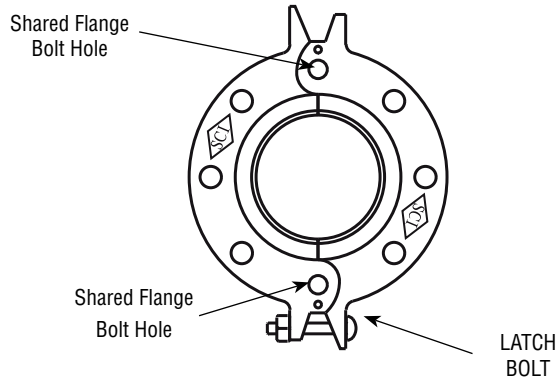

Hinged Flanged Adapter 65FH & 66FH

Mechanical and Strap Tees

Preparation:

After cutting hole, clean pipe surface within 3/4" of hole to make certain it is free from foreign matter to allow adequate seating of gasket. The area around the circumference of the pipe should be cleaned to allow full seating of the branch opening on the pipe surface.

Branch Outlet Size in	Mechanical Tees Hole Saw Size in	Strap Tees Hole Saw Size in
1/2"	1-1/2"	1-1/4"
3/4"	1-1/2"	1-1/4"
1"	1-1/2"	1-1/4"
1-1/4"	1-3/4"	-
1-1/2"	2"	-
2"	2-1/2"	-
2-1/2"	2-3/4"	-
3"	3-1/2"	-
4"	4-1/2"	-

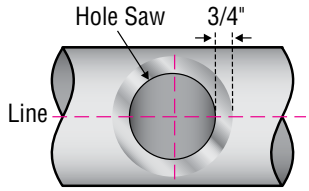

NOTE:
2 x 1-1/2 Mechanical Tee *(65MT3020014 & 66MT3020014) must only use a hole saw size of* ***1-3/4"***

Assembly:

1. Disassemble tee, removing track bolts.
2. Lubricate tee gasket using standard gasket lubricant.
3. Insert unit over hole, align it and hand-tighten bolts.
4. Gently rock the tee to assure proper placement over hole.
5. Wrench-tighten bolts alternately to the torque requirements shown below. Less torque than listed may not seat properly; more torque than listed may cause gasket to fail to hold pressure.
6. Check to see that housing is firmly installed against pipe with no gaps showing and that no foreign matter is between tee and pipe.

Tee Type	Torque ft/lbs
Mechanical	45-75
Strap	30

Installation Guidelines:

- Valves are listed/approved for indoor or outdoor installations.
- At least one rigid grooved coupling should be used when installing the grooved butterfly valve so the valve will not rotate on the pipe.
- For outdoor installations, weatherproof conduit and connectors must be used to assure the function of the internal switches. Wiring of the tamper switch must be in accordance with NFPA 72 and requirements of the local authorities.
- The disc of the wafer butterfly valve will extend beyond the valve body in the open position. Be certain that there will be no interference with other piping components during installation.
- Never force the valve closed by a wrench on the hand wheel or any other mechanical advantage as this could distort the valve's components or score the seating surface.

Installation Instructions:

1. Install the valve in the "closed" position to avoid damage to the disc.
2. **Grooved Butterfly Valve:** : Refer to installation instructions for grooved couplings with "C" Type Gaskets (Page 40) for details regarding installation of valve in piping system. For installation of Fire Protection Grooved End Butterfly Valve, refer to Tamper Switch Wiring Instructions below for proper wiring connection to alarm system.
3. **Wafer Butterfly Valve:** Install valve between two (2) Class 125/150 flanges, raised or flat face. No flange gasket is required.
4. Connect the wiring of the tamper switch to the fire alarm system as required by the "Authority Having Jurisdiction" (AHJ). Refer to Wiring Diagram below for proper connection.

Tamper Switch Wiring Instructions:

The tamper switch operates by the gear quadrant connected to the valve stem. The switch will operate within two (2) full turns of the hand wheel from the fully open position. The valve is normally supplied with the switches monitoring the valve in the open position. The double circuit provides one switch for the alarm system and a second switch for an indicating light or audible alarm at the valve location.

Switch #1 (S1): For connection to the supervisory circuit of a UL Listed alarm control panel.
Normally Closed: 2 Yellow Wires
Normally Open: 2 Red Wires
Common: 2 White Wires

Switch #2 (S2): Auxiliary switch for connection to a local device.
Normally Closed: 1 Blue Wire
Normally Open: 1 Orange Wire
Common: 1 Black Wire

Ground Lead: 1 Green Wire

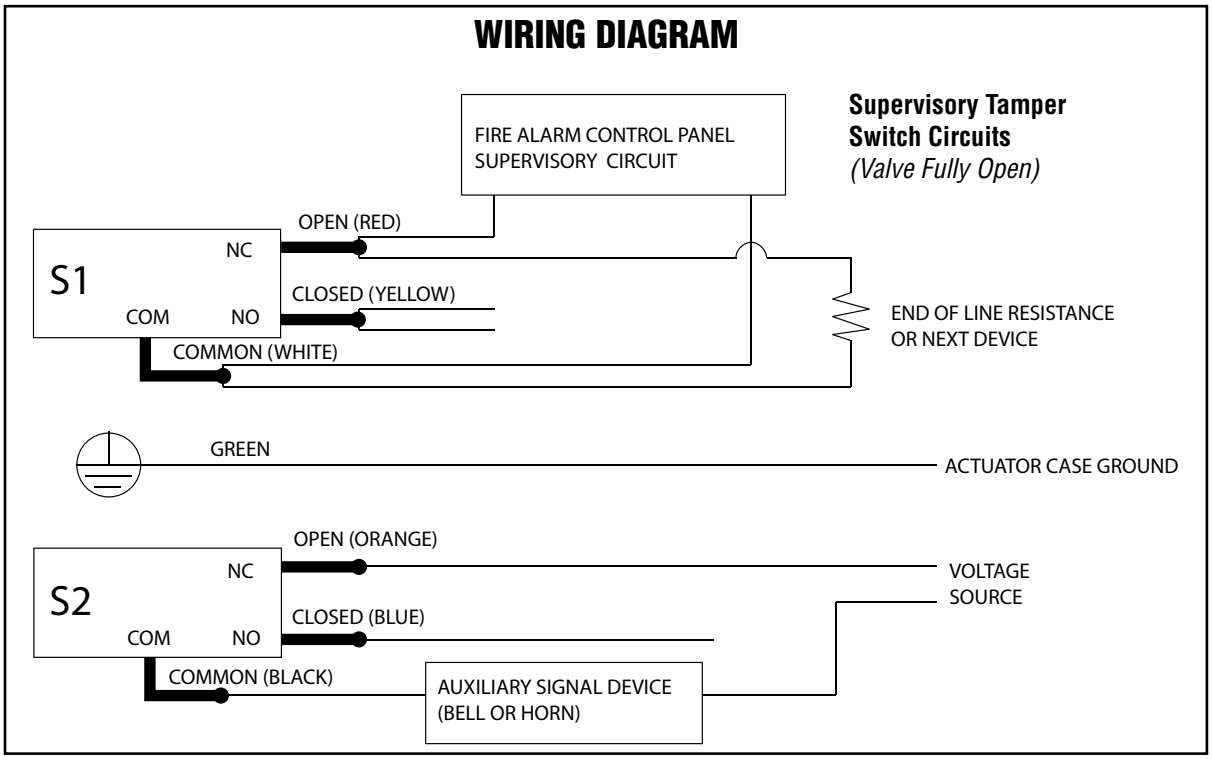

Riser Check Valve

Installation Guidelines:

- Intended for use in wet pipe fire sprinkler systems
- The arrow cast on the body must be pointed in the direction of the flow.
- Valves installed vertically must be positioned with the flow in the upward direction.
- Valves installed horizontally must be positioned so the hinge pin is on the top of the valve.
- Grooved end pipe couplings used with the check valve must be installed in accordance with the manufacturer's instructions.
- There are no renewable parts inside the valve. If the valve is leaking it must be replaced.
- Drain outlet: 1-1/2" NPT for 2-1/2" and 3" sizes, 2" NPT for sizes 4" and larger.
- Gauge connections: Two (2) 1/2" NPT
- Trim listings for each valve are available. Contact Smith-Cooper for details.

Installation Instructions:

1. Valve must not be installed in an area subjected to freezing temperatures.
2. Flush the water piping to ensure that no foreign materials are present before installing.
3. Install the valve into the piping system using grooved couplings; rigid couplings are recommended.
4. If the drain and gauge connections are being used remove the pipe plugs from the tapped holes.
5. Use PTFE tape or pipe dope on the male pipe threads to seal the threaded valve connections.
6. The valve can be tested at a maximum pressure of 350 psi for two hours.

Inspection and Maintenance:

- The system that the valve is installed in must be inspected on a regular basis depending on the requirements of NFPA 25 and the local "Authority Having Jurisdiction" (AHJ).

Pipe Size in / *mm*	Equivalent Length (Sch 40) ft / *m*	CV GPM at 1 psi drop
2-1/2 *65*	7.8 *2.4*	210
3 *80*	16.5 *5.0*	270
4 *100*	23.9 *7.3*	430
6 *150*	25.6 *7.8*	1250
8 *200*	43.0 *13.1*	1950

Grooved Check Valve

Installation Guidelines:

- The arrow cast on the body must be pointed in the direction of the flow.
- Valves installed vertically must be positioned with the flow in the upward direction.
- Valves installed horizontally must be positioned so the hinge pin is on the top of the valve.
- Grooved end pipe couplings used with the check valve must be installed in accordance with the manufacturer's instructions.

NOTE:

Check valves installed too close to sources of turbulent flow may cause potential damage and reduce life of the valve. Valves should be installed downstream from pumps, elbows, and reducers. Distances between three and five times the pipe diameters are allowable as long as flow velocity does not exceed eight feet per second (2.4 meters per second). Distances less than three pipe diameters are not recommended and will void warranty.

It is the designer's responsibility to select an appropriate valve for the intended service and to ensure that pressure and temperature ratings are not exceeded. Check valve sizing and gasket selection should be verified for compatibility with the specific application. Always read and understand installation instructions before beginning installation.

Standard Roll Groove Specifications AWWA C-606

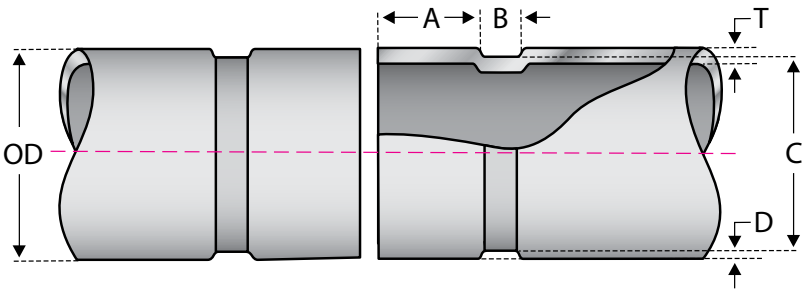

Pipe Size
Nominal IPS / metric pipe size.

OD - Pipe Outside Diameter
IPS / Metric outside diameter.

A & B - Gasket Seat & Groove Width
For IPS pipe, the maximum allowable tolerance from square cut ends are:
- 0.030˝ for 1" – 3-1/2˝
- 0.045˝ for 4" – 6˝
- 0.060˝ for sizes 8˝ and up

Measured from a true square line.

For metric size pipe, the maximum allowable tolerance from square cut ends are:
- 0.75mm for sizes 25 – 80mm
- 1.15mm for sizes 100 – 150mm
- 1.50mm for sizes 200mm and up

Measured from a true square line.

C - Groove Diameter
The groove must be of uniform depth around the entire pipe circumference
(See D - Groove Depth).

D - Groove Depth
For reference only. Groove must conform to C - Groove Diameter.

T - Minimum Allowable Wall Thickness
Minimum allowable wall thickness which may be roll grooved.

Maximum Flare Diameter
Maximum allowable pipe end flare diameter. Measured at the most extreme pipe end diameter of the gasket seat area.

Pipe Size	OD			A	B	C		D	T	Max Flare Dia.
	Pipe Outside Diameter			Gasket Seat	Groove Width	Groove Diameter		Groove Depth (Ref.)	Min. Wall Thick.	
	Actual	Tolerance +	Tolerance -	± 0.03 IN ± 0.77 mm	± 0.03 IN ± 0.77 mm	Actual	Tolerance +0.000			
in / *mm*	in / *mm*	in / *mm*	in / *mm*	in / *mm*	in / *mm*	in / *mm*	in / *mm*	in / *mm*	in / *mm*	in / *mm*
1	1.315	+0.015	–0.015	0.625	0.281	1.190	–0.015	0.062	0.065	1.360
25	*33.7*	*+0.381*	*–0.381*	*15.88*	*7.14*	*30.23*	*–0.381*	*1.575*	*1.575*	*34.5*
1-1/4	1.660	+0.015	–0.015	0.625	0.281	1.535	–0.015	0.062	0.065	1.705
32	*42.4*	*+0.381*	*–0.381*	*15.88*	*7.14*	*38.99*	*–0.381*	*1.575*	*1.575*	*43.3*
1-1/2	1.900	+0.015	–0.015	0.625	0.281	1.775	–0.015	0.062	0.065	1.945
40	*48.3*	*+0.381*	*–0.381*	*15.88*	*7.14*	*45.09*	*–0.381*	*1.575*	*1.575*	*49.4*
2	2.375	+0.024	–0.024	0.625	0.344	2.250	–0.015	0.062	0.065	2.447
50	*60.3*	*+0.610*	*–0.610*	*15.88*	*8.74*	*57.15*	*–0.381*	*1.575*	*1.575*	*62.2*
2-1/2	2.875	+0.029	–0.029	0.625	0.344	2.720	–0.018	0.078	0.083	2.962
65	*73.0*	*+0.737*	*–0.737*	*15.88*	*8.74*	*69.09*	*–0.457*	*1.981*	*2.108*	*75.2*
3	3.500	+0.035	–0.031	0.625	0.344	3.344	–0.018	0.078	0.083	3.566
80	*88.9*	*+0.889*	*–0.787*	*15.88*	*8.74*	*84.94*	*–0.457*	*1.981*	*2.108*	*90.6*
3-1/2	4.000	+0.040	–0.031	0.625	0.344	3.834	–0.020	0.083	0.083	4.071
90	*101.6*	*+1.016*	*–0.787*	*15.88*	*8.74*	*97.38*	*–0.508*	*2.108*	*2.108*	*103.4*
4	4.500	+0.045	–0.031	0.625	0.344	4.334	–0.020	0.083	0.083	4.576
100	*114.3*	*+1.143*	*–0.787*	*15.88*	*8.74*	*110.08*	*–0.508*	*2.108*	*2.108*	*116.2*
5	5.563	+0.056	–0.031	0.625	0.344	5.395	–0.022	0.084	0.109	5.650
125	*141.3*	*+1.422*	*–0.787*	*15.88*	*8.74*	*137.03*	*–0.559*	*2.134*	*2.769*	*143.5*
6	6.625	+0.063	–0.031	0.625	0.344	6.455	–0.022	0.085	0.109	6.719
150	*168.3*	*+1.600*	*–0.787*	*15.88*	*8.74*	*163.96*	*–0.559*	*2.159*	*2.769*	*170.7*
8	8.625	+0.063	–0.031	0.750	0.469	8.441	–0.025	0.092	0.109	8.719
200	*219.1*	*+1.600*	*–0.787*	*19.05*	*11.91*	*214.40*	*–0.635*	*2.337*	*2.769*	*221.5*
10	10.750	+0.063	–0.031	0.750	0.469	10.562	–0.027	0.094	0.134	10.844
250	*273.0*	*+1.600*	*–0.787*	*19.05*	*11.91*	*268.28*	*–0.686*	*2.388*	*3.404*	*275.4*
12	12.750	+0.063	–0.031	0.750	0.469	12.531	–0.030	0.109	0.156	12.844
300	*323.9*	*+1.600*	*–0.787*	*19.05*	*11.91*	*318.29*	*–0.762*	*2.769*	*3.962*	*326.2*
14	14.000	+0.063	–0.031	0.938	0.469	13.781	–0.030	0.109	0.156	14.094
350	*355.6*	*+1.600*	*–0.787*	*23.83*	*11.91*	*350.04*	*–0.762*	*2.769*	*3.962*	*253.0*
16	16.000	+0.063	–0.031	0.938	0.469	15.781	–0.030	0.109	0.165	16.094
400	*406.4*	*+1.600*	*–0.787*	*23.83*	*11.91*	*400.84*	*–0.762*	*2.769*	*4.191*	*408.8*
18	18.000	+0.063	–0.031	1.000	0.469	17.781	–0.030	0.109	0.165	18.094
450	*457.2*	*+1.600*	*–0.787*	*25.40*	*11.91*	*451.64*	*–0.762*	*2.769*	*4.191*	*459.6*
20	20.000	+0.063	–0.031	1.000	0.469	19.781	–0.030	0.109	0.188	20.094
500	*508.0*	*+1.600*	*–0.787*	*25.40*	*11.91*	*502.44*	*–0.762*	*2.769*	*4.775*	*510.4*
24	24.000	+0.063	–0.031	1.000	0.500	23.656	–0.030	0.172	0.218	24.100
600	*609.6*	*+1.600*	*–0.787*	*25.40*	*12.70*	*600.86*	*–0.762*	*4.369*	*5.53*	*612.1*

NOTES:

1. Gasket seat and groove must be smooth and free from scores, seams, chips, rust or scale which may interfere with proper coupling assembly.
2. Out of Roundness: Difference between maximum OD and minimum OD measured at 90° must not exceed total OD tolerance listed.
3. All tolerances not shown are to comply with latest ASME or ASTM specification applicable to material being used.
4. Not be used with End Shield™ gasket.

Standard Cut Groove Specifications AWWA C-606

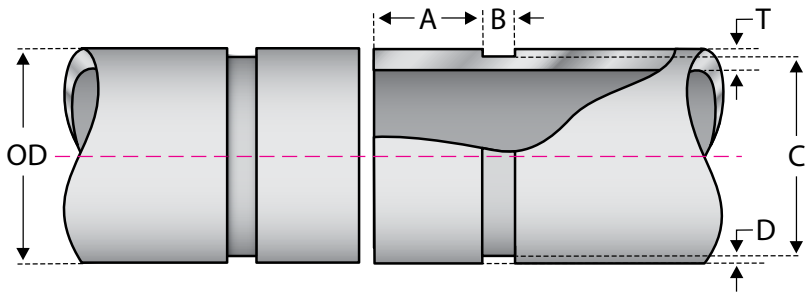

Pipe Size
Nominal IPS / metric pipe size.

OD - Pipe Outside Diameter
IPS / Metric outside diameter.

A & B - Gasket Seat & Groove Width
For IPS pipe, the maximum allowable tolerance from square cut ends are:
- 0.030˝ for 1" – 3-1/2˝
- 0.045˝ for 4" – 6˝
- 0.060˝ for sizes 8˝ and up

Measured from a true square line.

For metric size pipe, the maximum allowable tolerance from square cut ends are:
- 0.75mm for sizes 25 – 80mm
- 1.15mm for sizes 100 – 150mm
- 1.50mm for sizes 200mm and up

Measured from a true square line.

C - Groove Diameter
The groove must be of uniform depth around the entire pipe circumference
(See D - Groove Depth).

D - Groove Depth
For reference only. Groove must conform to C - Groove Diameter.

T - Minimum Allowable Wall Thickness
Minimum allowable wall thickness which may be cut grooved.

Pipe Size	OD			A	B	C		D	T
	Pipe Outside Diameter			Gasket Seat	Groove Width	Groove Diameter		Groove Depth (Ref.)	Min. Wall Thick.
	Actual	Tolerance +	Tolerance -	± 0.03 IN ± 0.77 mm	± 0.03 IN ± 0.77 mm	Actual	Tolerance +0.000		
in / *mm*	in / *mm*	in / *mm*	in / *mm*	in / *mm*	in / *mm*	in / *mm*	in / *mm*	in / *mm*	in / *mm*
1	1.315	+0.013	–0.013	0.625	0.312	1.190	-0.015	0.062	0.133
25	*33.7*	*+0.330*	*–0.330*	*15.88*	*7.93*	*30.23*	*–0.381*	*1.575*	*3.378*
1-1/4	1.660	+0.016	–0.016	0.625	0.312	1.535	–0.015	0.062	0.140
32	*42.4*	*+0.406*	*–0.406*	*15.88*	*7.93*	*38.99*	*–0.381*	*1.575*	*3.556*
1-1/2	1.900	+0.019	–0.019	0.625	0.312	1.775	–0.015	0.062	0.145
40	*48.3*	*+0.483*	*–0.483*	*15.88*	*7.93*	*45.09*	*–0.381*	*1.575*	*3.683*
2	2.375	+0.024	–0.024	0.625	0.312	2.250	–0.015	0.062	0.154
50	*60.3*	*+0.610*	*–0.610*	*15.88*	*7.93*	*57.15*	*–0.381*	*1.575*	*3.912*
2-1/2	2.875	+0.029	–0.029	0.625	0.312	2.720	–0.018	0.078	0.187
65	*73.0*	*+0.737*	*–0.737*	*15.88*	*7.93*	*69.09*	*–0.457*	*1.981*	*4.750*
3	3.500	+0.035	–0.031	0.625	0.312	3.344	–0.018	0.078	0.188
80	*88.9*	*+0.889*	*–0.787*	*15.88*	*7.93*	*84.94*	*–0.457*	*1.981*	*4.775*
3-1/2	4.000	+0.040	–0.031	0.625	0.312	3.834	–0.020	0.083	0.188
90	*101.6*	*+1.016*	*–0.787*	*15.88*	*7.93*	*97.38*	*–0.508*	*2.108*	*4.775*
4	4.500	+0.045	–0.031	0.625	0.375	4.334	–0.020	0.083	0.203
100	*114.3*	*+1.143*	*–0.787*	*15.88*	*9.53*	*110.08*	*–0.508*	*2.108*	*5.156*
5	5.563	+0.056	–0.031	0.625	0.375	5.395	–0.022	0.084	0.203
125	*141.3*	*+1.422*	*–0.787*	*15.88*	*9.53*	*137.03*	*–0.559*	*2.134*	*5.156*
6	6.625	+0.063	–0.031	0.625	0.375	6.455	–0.022	0.085	0.219
150	*168.3*	*+1.600*	*–0.787*	*15.88*	*9.53*	*163.96*	*–0.559*	*2.159*	*5.563*
8	8.625	+0.063	–0.031	0.750	0.437	8.441	–0.025	0.092	0.238
200	*219.1*	*+1.600*	*–0.787*	*19.05*	*11.10*	*214.40*	*–0.635*	*2.337*	*6.045*
10	10.750	+0.063	–0.031	0.750	0.500	10.562	–0.027	0.094	0.250
250	*273.0*	*+1.600*	*–0.787*	*19.05*	*12.70*	*268.28*	*–0.686*	*2.388*	*6.350*
12	12.750	+0.063	–0.031	0.750	0.500	12.531	–0.030	0.109	0.279
300	*323.9*	*+1.600*	*–0.787*	*19.05*	*12.70*	*318.29*	*–0.762*	*2.769*	*7.087*
14	14.000	+0.063	–0.031	0.938	0.500	13.781	–0.030	0.109	0.281
350	*355.6*	*+1.600*	*–0.787*	*23.83*	*12.70*	*350.04*	*–0.762*	*2.769*	*7.137*
16	16.000	+0.063	–0.031	0.938	0.500	15.781	–0.030	0.109	0.312
400	*406.4*	*+1.600*	*–0.787*	*23.83*	*12.70*	*400.84*	*–0.762*	*2.769*	*7.925*
18	18.000	+0.063	–0.031	1.000	0.500	17.781	–0.030	0.109	0.312
450	*457.2*	*+1.600*	*–0.787*	*25.40*	*12.70*	*451.64*	*–0.762*	*2.769*	*7.925*
20	20.000	+0.063	–0.031	1.000	0.500	19.781	–0.030	0.109	0.312
500	*508.0*	*+1.600*	*–0.787*	*25.40*	*12.70*	*502.44*	*–0.762*	*2.769*	*7.925*
24	24.000	+0.063	–0.031	1.000	0.563	23.656	–0.030	0.172	0.375
600	*609.6*	*+1.600*	*–0.787*	*25.40*	*14.30*	*600.86*	*–0.762*	*4.369*	*9.525*

NOTES:
1. For grooving pipe with wall thickness less than T - Minium Allowable Wall Thickness, see Roll Groove Specifications.
2. Gasket seat and groove must be smooth and free from scores, seams, chips, rust or scale which may interfere with proper coupling assembly.
3. Out of Roundness: Difference between maximum OD and minimum OD measured at 90° must not exceed total OD tolerance listed.
4. All tolerances not shown are to comply with latest ASME or ASTM specification applicable to material being used.
5. Not be used with End Shield™ gasket.

End Shield™ Cut Groove Specifications

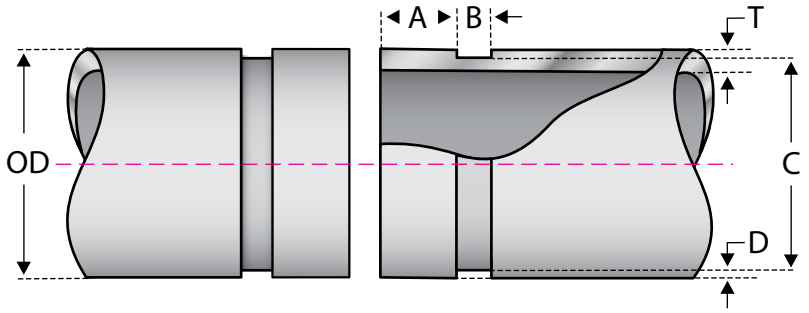

Pipe Size	OD			A		B		C		D	T
	Pipe Outside Diameter			Gasket Seat		Groove Width		Groove Diameter		Groove Depth	Minimum Wall Thickness
	Actual	Tolerance		Actual	Tolerance	Actual	Tolerance	Actual	Tolerance +0.000		
in / *mm*	in / *mm*	in / *mm*		in / *mm*	in / *mm*	in / *mm*	in / *mm*	in / *mm*	in / *mm*	in / *mm*	in / *mm*
2	2.375	+0.024	–0.024	0.562	±0.010	0.255	-0.005	2.250	–0.015	0.063	0.154
50	*60.3*	*+0.610*	*–0.610*	*14.27*	*±0.25*	*6.48*	*-0.13*	*57.15*	*–0.38*	*1.60*	*3.91*
3	3.500	+0.035	–0.031	0.562	±0.010	0.255	-0.005	3.344	–0.018	0.078	0.188
80	*88.9*	*+0.889*	*–0.787*	*14.27*	*±0.25*	*6.48*	*-0.13*	*84.94*	*–0.46*	*1.98*	*4.78*
4	4.500	+0.045	–0.031	0.605	±0.015	0.305	-0.005	4.334	–0.020	0.083	0.203
100	*114.3*	*+1.143*	*–0.787*	*15.37*	*±0.38*	*7.75*	*-0.13*	*110.08*	*–0.51*	*2.11*	*5.16*
6	6.625	+0.063	–0.031	0.605	±0.015	0.305	-0.005	6.455	–0.022	0.085	0.219
150	*168.3*	*+1.600*	*–0.787*	*15.37*	*±0.38*	*7.75*	*-0.13*	*163.96*	*–0.56*	*2.16*	*5.56*
8	8.625	+0.063	–0.031	0.714	±0.015	0.400	-0.010	8.441	–0.025	0.092	0.238
200	*219.1*	*+1.600*	*–0.787*	*18.14*	*±0.38*	*10.16*	*-0.25*	*214.40*	*–0.64*	*2.34*	*6.05*

Pipe Size
Nominal IPS / metric pipe size.

OD - Pipe Outside Diameter
IPS / Metric outside diameter.

A & B - Gasket Seat & Groove Width
For IPS pipe, the maximum allowable tolerance from square cut ends are:
- 0.030˝ for 1" – 3-1/2˝
- 0.045˝ for 4" – 6˝
- 0.060˝ for sizes 8˝ and up

Measured from a true square line.

For metric size pipe, the maximum allowable tolerance from square cut ends are:
- 0.75mm for sizes 25 – 80mm
- 1.15mm for sizes 100 – 150mm
- 1.50mm for sizes 200mm and up

Measured from a true square line.

C - Groove Diameter
The groove must be of uniform depth around the entire pipe circumference
(See D - Groove Depth).

D - Groove Depth
For reference only. Groove must conform to C - Groove Diameter.

T - Minimum Allowable Wall Thickness
Minimum allowable wall thickness which may be cut or roll grooved.

Maximum Flare Diameter
Maximum allowable pipe end flare diameter. Measured at the most extreme pipe end diameter of the gasket seat area.

NOTES:
1. Pipe grooved to the above specifications is for use with 65HP-ES couplings only.
2. Gasket seat (A) and groove width (B) must be smooth and free from scores, seams, chips, rust or scale which may interfere with proper coupling assembly.
3. Out of Roundness: Difference between maximum OD and minimum OD measured at 90° must not exceed total OD tolerance listed.
4. All tolerances not shown are to comply with latest ASME or ASTM specification applicable to material being used.

Standard "C" Type – Fig. 65GCPE (EPDM), 65GCPN (Nitrile) 65GCPF (Fluoroelastomer)

Standard "C" Type gaskets are the most commonly used coupling gasket. When installed, they provide a seal over each grooved pipe end. As coupling housings are tightened, they form the gasket to the inside cavity of the coupling creating an additional seal. The pressure of the system increases the sealing action of the gasket against the pipe, providing a leak-tight seal. For use with COOPLOK™ 65LR, 65LF, 65SR & 65SF couplings. For COOPLOK™ 65HP Couplings, use 65GHPN (Nitrile with Double Orange Stripe) gaskets only.

Available in Pre-Lubricated EPDM, Nitrile & Fluoroelastomer*. Sizes: 1-1/4" to 24"
*(Sizes: 1-1/4" to 12")

Triple Seal – Fig. 65GTRI (EPDM)

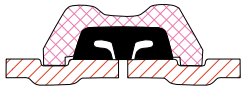

Triple Seal gaskets are typically used in dry pipe fire protection systems, freezer applications and vacuum service. They differ from the "C" Type gasket in that they have an additional center sealing surface that sits over the pipe gap where the grooved pipe ends meet. As the coupling housing is tightened, the center seal closes off the pipe gap and provides the "triple seal". Sold as part of COOPLOK™ 65LRTRI coupling.
(**NOTE:** A petroleum-free silicone based lubricant is recommended for dry pipe systems.)

Available in EPDM only. Sizes: 1-1/4" to 8"

End Shield™ – Fig. 65GCPNES (Nitrile)

End Shield™ gaskets are specially designed for use with COOPLOK™ Grooved 65HP-ES high pressure rigid couplings in applications with lined pipe. They differ from the Triple Seal gasket in that the center rib is positioned in between the pipe ends. This results in a continuous lined surface and protects the pipe ends from corrosion and damage.

Available in Nitrile only. Sizes: 2", 3", 4" & 6"

Reducing Coupling – Fig. 65GRCE (EPDM) & 65GRCN (Nitrile)

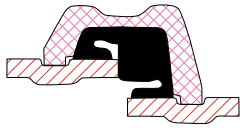

Reducing Coupling gaskets provide sealing surfaces for the two sizes of pipe they join, similar to the "C" Type gaskets. Coupling housings are tightened and the gasket seals each grooved pipe end. For use with COOPLOK™ 65RC coupling sizes only.

Available in EPDM & Nitrile. Sizes: 2" x 1-1/2" to 8" x 6"

Flange Adapter – Fig. 65GFHE (EPDM) & Fig. 65GFHN (Nitrile)

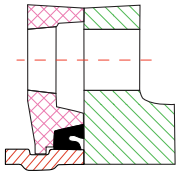

The Flange Adapter gasket provides a seal between the grooved end pipe and the flange surface it meets. Specifically designed for use with COOPLOK™ 65FH Hinged Flanged Adapter.

Available in EPDM & Nitrile. Sizes: 2" to 12"

Mechanical Tee – Fig. 65GMT (EPDM) & Strap Tee – Fig. 65GMU (EPDM)

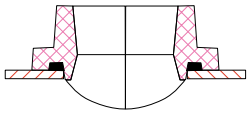

Mechanical Tee & Strap Tee gaskets are made to conform to the exterior surface of the pipe. When fittings are tightened, a compression-type seal is formed. For use with COOPLOK™ 65MT, 65MG & 65MU fittings.

Available in EPDM only. Sizes: 2" to 8" for 65MT & 65MG; 1-1/4" to 2-1/2" for 65MU

Please see complete installation instructions at www.smithcooper.com for important guidelines and limitations on the use and applications of SCI COOPLOK™, Grooved Couplings and Fittings.

Gasket Selection Guidelines:

Smith-Cooper International carries a variety of gaskets for the COOPLOK™ Grooved product line. These gaskets are manufactured from different rubber compounds that will allow the use of COOPLOK™ Grooved products in a range of applications.

Each is uniquely identified with the SCI logo and figure number of the matching COOPLOK™ part, as required by Underwriters Laboratories.

Proper gasket selection is critical for specific intended service and/or application. Improper selection of rubber compound may result in joint failure or leakage, causing potential injury or damage.

Gasket Storage:

- Gaskets need to be stored indoors, in a cool, dry place, not subjected to freezing conditions, in original SCI packaging.
- Basic instructions on storage, cleaning and preservations of elastomer sealing element are described in ISO 2230 and must be observed.
- Gaskets exposed to light, heat, moisture, oils, solvents, oxygen and ozone may impair gasket performance. Exposure to these elements can degrade the elastomer which may cause softening, cracking, deformation, hardening and possible breakage if stored in an inappropriate manner.

Refer to the Chemical Services Chart on Pages 44-46 for information about gasket compatibility with a wide range of media.

Standard Gaskets

Grade	Temp. Range	Compound	Color Code	General Service Applications
E	-30°F to +230°F (-34°C to 110°C)	Pre-Lubricated EPDM	Green Stripe	Water, dilute acids, alkalies, salts, and many chemical services not involving hydrocarbons, oils, or gases. Excellent oxidation resistance. **NOT FOR USE WITH HYDROCARBONS, LUBRICANTS OR OILS**
T	-20°F to +180°F (-29°C to 82°C)	Nitrile (Buna-N)	Orange Stripe	Petroleum products, vegetable oils, mineral oils and air contaminated with petroleum oils. **NOT FOR USE IN HOT WATER SERVICES.**
O	+20°F to +300°F (-6°C to 149°C)	Fluoroelastomer	Blue Stripe	High temperature resistance to oxidizing acids, petroleum oils, hydraulic fluids, halogenated hydrocarbons, and lubricants.

Gasket Grades – Common Applications

Water and Air Service	Gasket Grade
Air, (no oil vapors) Temp. -40°F to 230°F (-40° to 110°C)	E
Air, Oil vapor Temp. -20°F to 150°F (-29°C to 66°C)	T
Air, Oil vapor Temp. 20°F to 300°F (-7°C to 149°C)	O
Water, Temp. to 150°F (66°C)	E/T*
Water, Temp. to 230°F (110°C)	E
Water, Acid Mine	E/T*
Water, Chlorine	E/O*
Water, Deionized	E/T*
Water, Seawater	E/T*
Water, Waste	E/T*
Water, Lime	E/T*

Petroleum Products Service	Gasket Grade
Crude Oil - Sour	T
Diesel Oil	T
Fuel Oil	T
Gasoline, Leaded	T
Gasoline, Unleaded	O
Hydraulic Oil	T
JP-3, JP-4, and JP-5	T/O*
JP-6, 100°F (38°C) Maximum Temp.	T
Kerosene	T
Lube Oil, to 150°F (66°C)	T
Motor Oil	T
Tar and Tar Oil	T
Transmission Fluid - Type A	O
Turbo Oil #15 Diester Lubricant	O

**Where more than one gasket grade is shown the preferred gasket grade is listed first.*

Chemical Composition	Gasket Grade
Acetaldehyde	E
Acetamide	T
Acetic Acid up to 50%	NR
Acetic Acid, Glacial	NR
Acetic Anhydride	E
Acetone	E
Acetonitrile	T
Acetophenone	E
Acetylene	E/T
Acrylonitrile	NR
Adipic Acid	T
Air, oil free	E
Air with vapored oil	T
Alkalis	E
Allyl Alcohol to 96%	E
Allyl Chloride	NR
Aluminum Chloride	E/T
Aluminum Fluoride	E/T/O
Aluminum Hydroxide	E/O
Aluminum Nitrate	E/T
Aluminum Phosphate	E
Aluminum Salts	E
Aluminum Sulfate	E/T
Alums	E/T
Ammonia Anhydrous (Pure Ammonia)	NR
Ammonia, Gas, Cold	E
Ammonia, Aqua, 10 - 25%	E
Ammonium Bifluoride	T
Ammonium Carbonate	E
Ammonium Chloride	E/T
Ammonium Fluoride,	E
Ammonium Hydroxide	E
Ammonia Liquid	E
Ammonium Metaphosphate	E
Ammonium Nitrate	E/T
Ammonium Nitrite	E
Ammonium Persulfate, to 10%	E
Ammonium Phosphate	T
Ammonium Sulfamate	T
Ammonium Sulfate	E/T
Ammonium Sulfide	E
Ammonium Thiocyanate	E
Amyl Acetate	E
Amyl Alcohol	E
Amyl Chloride	NR
Anderol	O
Aniline	E
Aniline Oil	E
Anthraquinone	NR
Anthraquinone Sulfonic Acid	NR
Antimony Chloride	E
Antimony Tricholoride	E
Argon Gas	E/O
Aroclors	O
Arsenic Acid, to 75%	T/O
Arylsulfonic Acid	NR
ASTM #1, 2 & 3 Oil	T
Barium Carbonate	E
Barium Chloride	E/T
Barium Hydroxide	E/T

Chemical Composition	Gasket Grade
Barium Sulfide	T
Benzene	O
Benzol	O
Benzyl Alcohol	E
Benzyl Benzoate	E
Benzyl Chloride	E
Black Sulfate Liquor	T
Bleach, 12% Active Cl2	E
Borax	E/O
Bordeaux Mixture	E
Boric Acid	E/T
Bromine	O
Bromotoluene	NR
Butanol (see Butyl Alcohol)	E/T
Butyl Acetyl Ricinoleate	E
Butyl Alcohol	E/T
Butyl Stearate	T
Butylene	T/O
Butylene Glycol	E
Butyne Diol	NR
Calcium Bisulfate	T/O
Calcium Bisulfide	T/O
Calcium Bisulfite	T
Calcium Carbonate	E/T
Calcium Chlorate	E/T
Calcium Chloride	E/T
Calcium Hydroxide (Lime)	E/T
Calcium Hypochlorite	E
Calcium Hypochloride	E
Calcium Nitrate	E/T
Calcium Sulfate	E/T
Calcium Sulfide	E/T
Caliche Liquors	T
Carbitol "	E/T
Carbon Dioxide, Dry	E/T
Carbon Dioxide, Wet	E/T
Carbon Disulphide	O
Carbon Monoxide	E
Carbon Tetrachloride	O
Carbonic Acid, Phenol	O
Caster Oil	T
Caustic Potash	E
Cellosolve	E
Cellulose Acetate	E
Cellulube 220 (Tri-Aryl-Phosphate)	E
Cellulube Hydraulic Fluids	E
China Wood Oil, Tung Oil	T
Chloralhydrate	NR
Chloroacetone	E
Chlorobenzene	O
Chlorobromomethane	NR
Chloroform	O
Chlorosulphonic Acid	NR
Chrome Alum	E/T
Chromic Acid, to 10%	O
Chromic Acid, to 25%	O
Chrome Plating Solutions	O
Citric Acid, Saturated	E
Coke Oven Gas	T/O
Copper Carbonate	E/T

Chemical Composition	Gasket Grade
Copper Chloride	E/T
Copper Cyanide	E/T
Copper Fluoride	E
Copper Nitrate	E/T
Copper Sulfate	E/T
Cresole, Cresylic Acid	O
Creosote, Coal Tar	T/O
Creosote, Wood	T/O
Cupric Fluoride	E/T
Cupric Sulfate	E/T
Cyclohexane Alycyclic (Hydrocarbon)	O
Cyclohexanol	O
Dextrim	T
Dibutyl Phthalate	E
Dichloro Difloro Methane	T
Diesel Oil	T
Diethyl Sebacate	E
Diethylamine	T
Diethylene Glycol	E/T
Digester Gas	T
Dimethylamine	T
Dioctyl Phthalate	E
Dioxane	E
Diproplylene Glycol	T
Dowtherm A	O
Dowtherm E	O
Dowtherm SR-1	T/E
Ethanolamine	E
Ethers	NR
Ethyl Acetoacetate	E
Ethyl Acrylate	NR
Ethyl Alcohol (Ethanol)	E
Ethyl Chloride	E/T
Ethyl Ether	T
Ethyl Oxalate	E
Ethyl Silicate	T
Ethylene Chlorohydrin	E
Ethylene Diamine	E/T
Ethylene Dichloride (Dichloroethane)	O
Ethylene Glycol	E/T
Ethylene Oxide	NR
Ferric Chloride, to 35%	E/T/O
Ferric Chloride, Saturated	NR
Ferrous Sulfate	T
Fluboric Acid	E
Fluorine Gas, Wet	NR
Fly Ash	E
FM200	E
Foam	E
Formaldehyde	E/T
Formanide	T
Formic Acid, to 25%	E
Freon 11, 130°F (54°C) Max.	T
Freon 12, 130°F (54°C) Max.	T
Freon F-12	T
Freon 123	NR
Freon 134a, 176°(80°C)	E/T
Freon F-21	NR
Freon 113 130°F/54°C	T
Freon 114,130°F/54°C	T

Chemical Services

Chemical Composition	Gasket Grade
Fructose	T
Fuel Oil	T
Fumaric Acid	E
Furan	NR
Furfuryl Alcohol	E
Gallic Acid	NR
Gasoline, Refined	T
Gasoline, Unleaded	O
Glue	T
Glycerine	E/T
Glycerol	E/T
Glycol	E/T
Grease	T/O
Green Sulfate Liquor	T
Halon 1301	E
Heptane	T
Hexaldehyde	E
Hexane	T
Hexanol	T
Hexanol Tertiary	T
Hexyl Alcohol	T
Hexylene Glycol	T
Hydrobromic Acid, to 40%	E
Hydrochloric Acid, to 36%, 75°F (24°C) – Max.	E
Hydrocyanic Acid, to 10%	E
Hydrofluoric Acid, to 30%	O
Hydrofluosilicic Acid, to 50%	T
Hydrogen Phosphide	NR
Hydrogen Sulfide.	E
Hydroquinone	T/O
Hypochlorous Acid, Dilute	E
Isobutyl Alcohol	E
Iso Octane, 100°F/38°C	T
Isopropyl Acetate	E
Isopropyl Alcohol	E
Jet Fuel, JP-4	T/O
Jet Fuel, JP-5	T/O
Kerosene	T
Latex (1% Styrene & Butadiene)	O
Lauric Acid	T
Lauryl Chloride	NR
Lavender Oil	T
Lead Acetate	E/T
Lead Sulfate	T
Lime and H^2O	E/T
Lime Sulfur	O
Linoleic Acid	O
Lithium Bromide (Brine)	T/O
Lithium Chloride	T/O
Lubricating Oil, Refined	T
Lubricating Oil, Sour	T
Lubricating Oil, to 150°F/66°C	T
Magnesium Chloride	E/T
Magnesium Hydroxide	E/T
Magnesium Nitrate	E
Magnesium Sulfate	E/T
Maleic Acid, Saturated	T
Malic Acid	T
Mercuric Chloride	E/T

Chemical Composition	Gasket Grade
Mercuric Cyanide	E/T
Mercurous Nitrate	E/T
Mercury	E/T
Methane	T
Methyl Alcohol, Methanol	E/T
Methyl Isobutyl Ketone	NR
Methyl Isobutyl Carbinol	E
Methylene Chlorobromide	NR
Methylene Dichloride	O
MIL-05606	O
MIL-08515	O
MIL-L7808	O
Mineral Oils	T
Naphta	O
Naphtalene	NR
Nickel Chloride	E/T
Nickel Plating Solution, 125°F (52°C) – Max.	E
Nitric Acid, to 10%, 75°F (24°C) – Max.	E
Nitric Acid, 10%-50%, 75°F (24°C) – Max.	O
Nitrogen	E
Nitromethane	E
Nitrous Oxide	E
Ogisogiric Acid, to 75%	O
Oil, Crude Sour	T
Oil, Motor	T
Oleic Acid	T
Olive Oil	T
Oronite 8200 Silicate Ester Fluid	O
Orthodichlorobenzene	O
OS-45 Silicate Ester Fluid	O
OS-45-1	O
Oxalic Acid	E
Ozone (100 ppm)	E
Palm Oil	T
Perchloric Acid	NR
Perchloroethylene	O
Petroleum Ether (see Benzene)	O
Petroleum Oils	T
Phenol (Carbolic Acid)	O
Phosohoric Acid, to 50%, 70°F (21°C) – Max.	E
Phosohoric Acid, to 85%, 150°F (66°C) – Max.	O
Phosphate Ester	E
Photographic Solutions	T
Phthalic Anhydride (gold, brass cadmium,copper, lead, silver, tin, zinc)	E
Polybutene	T
Polyvinyl Acetate, Solid in Liquid State is 50% solution of Methanol or 60% solution of (H^2O)	E
Potash	E
Potassium Alum	E/T
Potassium Aluminum Sulfate	E/T
Potassium Bicarbonate	E/T
Potassium Bichromate	E/T
Potassium Borate	E

Chemical Composition	Gasket Grade
Potassium Bromate	E
Potassium Bromide	E/T
Potassium Carbonate	E/T
Potassium Chlorate	E
Potassium Chloride	T
Potassium Chromate	T
Potassium Cyanide	E/T
Potassium Dichromate	E
Potassium Ferrocyanide	E
Potassium Fluoride	E
Potassium Hydroxide	T
Potassium Nitrate	E/T
Potassium Perborate	E
Potassium Perchlorate	T
Potassium Permanganate, to 10%	E
Potassium Permanganate, to 25%	E
Potassium Persulfate	T
Potassium Silicate	E/T
Potassium Sulfate	E/T
Prestone	T
Propane Gas	T
Propanol	E
Propargyl Alcohol	E
Propyl Alcohol	E/T
Propylene Dichloride	L
Propylene Glycol	E
Pydraul F-9 and F-150	NR
Pyroguard "C"	T
Pyroguard "D"	T
Pyroguard 55	E
Pyrrole	E
Ref. Fuel (ISO Octane, 30 Toluene)	T
Rosin Oil	T
Salicylic Acid	E
Secondary Butyl Alcohol	T
Sewage	E/T
Silver Nitrate	E
Silver Sulfate	E
Skydrol 200oF (93oC)-Max.	NR
Soap Solutions	E/T
Soda Ash, Sodium Carbonate	E/T
Sodium Acetate	E
Sodium Alum	T
Sodium Benzoate	E/T
Sodium Bicarbonate	E/T
Sodium Bisulfate	E/T
Sodium Bisulfite (Black Liquor)	E/T
Sodium Bromide	E/T
Sodium Carbonate	E/T
Sodium Chlorate	E
Sodium Chloride	E/T
Sodium Cyanide	E/T
Sodium Dichromate, to 20%	E/T
Sodium Ferricyanide	E/T
Sodium Ferrocyanide	E/T
Sodium Fluoride	E/T
Sodium Hydroxide, to 15%	E
Sodium Hydroxide, to 50%	E
Sodium Hypochlorite, to 20%	E
Sodium Metaphosphate	E/T

Chemical Composition	Gasket Grade
Sodium Nitrite	E/T
Sodium Nitrate	E
Sodium Perborate	E
Sodium Peroxide	E
Sodium Phosphate, Neutral	T
Sodium Silicate	T
Sodium Sulfate	E/T
Sodium Sulfide	E/T
Sodium Suplhite Solution, to 20%	T
Sodium Thiosulfate "Hypo"	T
Sohovis 47	T
Sohovis 78	T
Solvasol #1,2 & 3	T
Solvasol #73	T
Solvasol #74	NR
Spindle Oil	T
Stannic Chloride	T
Stannous Chloride, to 15%	T
Starch	E/T
Steam	NR
Stearic Acid	T
Stoddard Solvent	T
Styrene	O
Sulfur	E
Sulfur Chloride	O

Chemical Composition	Gasket Grade
Sulfur Dioxide, Dry	E
Sulfur Dioxide, Wet	E
Sulfuric Acid, to 25%, 150°F (66°C) – Max.	E
Sulfuric Acid, to 25-50%, 200°F (93°C) – Max.	O
Sulfuric Acid, to 50-95%, 150°F (66°C) – Max.	O
Sulfurous Acid	O
Tall Oil	T
Tanning Liquors(50g. alum. Solution, 50g. dichromate solution)	T
Tartaric Acid	
Tertiary Butyl Alcohol	E/T
Tetrachloroethylene	O
Tetrahydrofuran	NR
Tetralin	NR
Thiopene	NR
Titanium Tetrachloride	O
Toluene, to 30%	T
Transmission Fluid, Type A	O
Triacetin	T
Trichloroethane	O
Trichloroethylene	O
Triethanolamine	E/T

Chemical Composition	Gasket Grade
Trisodium Phosphate	E
Tung Oil	T
Turbo Oil #15 Diester Lubricant	O
Turpentine	T
Urea	T/E
Vinyl Acetate	E
Vinyl Chloride	O
Vi-Pex	T
Water, to 150°F/66°C	E/T
Water, to 200°F/93°C	E
Water, to 230°F/110°C	E
Water, to 250°F/120°C	E
Water, Acid Mine	E/T
Water, Bromine	O
Water, Chlorinated, to 3500ppm	E
Water, Deionized	E
Water, Potable	E
Water, Seawater	E
Water, waste	E/T
White Liquor	E
Wood Oil	T
Zinc Chloride, to 50%	E
Zinc Nitrate	E
Zinc Sulfate	E/T

Notes:

- Recommended gasket grades shown are from information supplied by manufacturers of elastomers and rubber compounds, as well as technical and industry publications.
- This information is presented for evaluation purposes and does not constitute a guarantee for specific service conditions.
- When more than one gasket grade is shown, the preferred gasket grade is listed first.
- Unless otherwise noted, all gasket listings are based upon 100°F (38°C) maximum temperature service conditions
- NR = Not Recommend

Replacement Gaskets

Grooved Coupling Gaskets

Size	Part Number					
	"C" Type				Triple Seal	End Shield™
in	E-EPDM	T-Nitrile	HP T-Nitrile	O-Fluoroelastomer	E-EPDM	T-Nitrile
1	65GCPE010	65GCPN010	-	65GCPF010	-	-
1-1/4	65GCPE012	65GCPN012	-	65GCPF012	65GTRI012	-
1-1/2	65GCPE014	65GCPN014	-	65GCPF014	65GTRI014	-
2	65GCPE020	65GCPN020	65GHPN020	65GCPF020	65GTRI020	65GES020
2-1/2	65GCPE024	65GCPN024	-	65GCPF024	65GTRI024	-
3	65GCPE030	65GCPN030	65GHPN030	65GCPF030	65GTRI030	65GES030
4	65GCPE040	65GCPN040	65GHPN040	65GCPF040	65GTRI040	65GES040
5	65GCPE050	65GCPN050	-	65GCPF050	65GTRI050	-
6	65GCPE060	65GCPN060	65GHPN060	65GCPF060	65GTRI060	65GES060
8	65GCPE080	65GCPN080	-	65GCPF080	65GTRI080	-
10	65GCPE100	65GCPN100	-	65GCPF100	-	-
12	65GCPE120	65GCPN120	-	65GCPF120	-	-
14	65GCPE140	65GCPN140	-	-	-	-
16	65GCPE160	65GCPN160	-	-	-	-
18	65GCPE180	65GCPN180	-	-	-	-
20	65GCPE200	65GCPN200	-	-	-	-
24	65GCPE240	65GCPN240	-	-	-	-

Reducing Coupling Gaskets

Size	Part Number	
in	E-EPDM	T-Nitrile
2 x 1-1/2	65GRCE020014	65GRCN020014
2-1/2 x 2	65GRCE024020	65GRCN024020
3 x 2	65GRCE030020	65GRCN030020
3 x 2-1/2	65GRCE030024	65GRCN030024
4 x 2	65GRCE040020	65GRCN040020
4 x 2-1/2	65GRCE040024	65GRCN040024
4 x 3	65GRCE040030	65GRCN040030
6 x 4	65GRCE060040	65GRCN060040
8 x 6	65GRCE080060	65GRCN080060

Hinged Flange Adapter Gaskets

Size	Part Number	
in	E-EPDM	T-Nitrile
2	65GFHE020	65GFHN020
2-1/2	65GFHE024	65GFHN024
3	65GFHE030	65GFHN030
4	65GFHE040	65GFHN040
5	65GFHE050	65GFHN050
6	65GFHE060	65GFHN060
8	65GFHE080	65GFHN080
10	65GFHE100	65GFHN100
12	65GFHE120	65GFHN120

Strap Tee Gaskets

Size Run x Branch	Part Number
in	E-EPDM
1-1/4 x 1/2	All Sizes Use 65GMU012024
1-1/4 x 3/4	
1-1/4 x 1	
1-1/2 x 1/2	
1-1/2 x 3/4	
1-1/2 x 1	
2 x 1/2	
2 x 3/4	
2 x 1	
2-1/2 x 1/2	
2-1/2 x 3/4	
2-1/2 x 1	

Mechanical Tee Gaskets

Size Run x Branch	Part Number
in	E-EPDM
2 x 1/2	65GMT020004
2 x 3/4	65GMT020006
2 x 1	65GMT020010
2 x 1-1/4	65GMT020012
2 x 1-1/2	65GMT020014
2-1/2 x 1/2	65GMT024004
2-1/2 x 3/4	65GMT024006
2-1/2 x 1	65GMT024010
2-1/2 x 1-1/4	65GMT024012
2-1/2 x 1-1/2	65GMT024014
3 x 1	65GMT030010
3 x 1-1/4	65GMT030012
3 x 1-1/2	65GMT030014
3 x 2	65GMT030020
4 x 1	65GMT040010
4 x 1-1/4	65GMT040012
4 x 1-1/2	65GMT040014
4 x 2	65GMT040020
4 x 2-1/2	65GMT040024
4 x 3	65GMT040030
5 x 1-1/4	65GMT050012
5 x 1-1/2	65GMT050014
5 x 2	65GMT050020
5 x 2-1/2	65GMT050024
5 x 3	65GMT050030
6 x 1-1/4	65GMT060012
6 x 1-1/2	65GMT060014
6 x 2	65GMT060020
6 x 2-1/2	65GMT060024
6 x 3	65GMT060030
6 x 4	65GMT060040
8 x 2	65GMT080020
8 x 2-1/2	65GMT080024
8 x 3	65GMT080030
8 x 4	65GMT080040

Replacement Electroplated Track Bolts & Hex Nuts

Grooved Coupling Track Bolts & Hex Nuts

Size in	Standard Flexible 65SF & 66SF	Standard Rigid 65SR & 66SR	Lightweight Flexible 65LF & 66LF	Lightweight Rigid 65LR & 66LR	High Pressure 65HP	High Pressure 65HP-ES
1	3/8 x 2	3/8 x 2	-	-	-	-
1-1/4	1/2 x 2-3/4	3/8 x 2	3/8 x 2	3/8 x 2	-	-
1-1/2	1/2 x 2-3/4	3/8 x 2	3/8 x 2	3/8 x 2	-	-
2	1/2 x 2-3/4	3/8 x 2-1/2	3/8 x 2-1/2	3/8 x 2-1/2	5/8 x 3	5/8 x 3
2-1/2	1/2 x 3	1/2 x 3	3/8 x 2-1/2	3/8 x 2-3/4	-	-
3	1/2 x 3	1/2 x 3	3/8 x 2-1/2	3/8 x 2-3/4	5/8 x 3	5/8 x 3-1/2
4	5/8 x 3-1/2	1/2 x 3	1/2 x 3-1/4	3/8 x 2-3/4	3/4 x 4	3/4 x 4-1/4
5	3/4 x 4-1/2	5/8 x 4	5/8 x 4	1/2 x 3-1/4	-	-
6	3/4 x 4-1/2	5/8 x 4	5/8 x 4	1/2 x 3-1/4	7/8 x 5-1/4	7/8 x 6
8	7/8 x 5-1/4	3/4 x 5-1/4	3/4 x 4-1/2	5/8 x 4-3/4	-	-
10	1 x 6	7/8 x 6	-	-	-	-
12	1 x 6	7/8 x 6	-	-	-	-
14	1 x 5-1/2 (4-pc)	7/8 x 5-1/4 (3-pc)	-	-	-	-
16	1 x 5-1/2 (4-pc)	7/8 x 5-1/4 (3-pc)	-	-	-	-
18	1-1/8 x 6 (4-pc)	7/8 x 5-1/4 (3-pc)	-	-	-	-
20	1-1/8 x 6 (4-pc)	1 x 5-1/4 (4-pc)	-	-	-	-
24	1-1/8 x 6 (6-pc)	1 x 5-1/4 (4-pc)	-	-	-	-

NOTE: *Couplings are 2 pieces unless noted.*

Reducing Coupling Track Bolts & Hex Nuts

Size in	Bolt Size
2 x 1-1/2	3/8 x 2
2-1/2 x 2	3/8 x 2-3/4
3 x 2	1/2 x 2-3/4
3 x 2-1/2	1/2 x 2-3/4
4 x 2	1/2 x 3-1/4
4 x 2-1/2	1/2 x 3-1/4
4 x 3	1/2 x 3-1/4
6 x 4	5/8 x 4
8 x 6	3/4 x 4-1/2

Hinged Flange Adapter Latch Bolts

Size in	Bolt Size
2 - 12	All Sizes Use 3/8 x 2-3/4

NOTE: *SCI does not supply flange bolts or nuts.*

Bolt & Hex Nut Part Number Reference

Size in	Part Number
3/8 x 2	65NB003020
3/8 x 2-1/2	65NB003024
3/8 x 2-3/4	65NB003026
1/2 x 2-3/4	65NB004026
1/2 x 3	65NB004030
1/2 x 3-1/4	65NB004032
1/2 x 3-3/4	65NB004036
5/8 x 3-1/2	65NB005034
5/8 x 4	65NB005040
5/8 x 4-3/4	65NB005046
3/4 x 4-1/2	65NB006044
3/4 x 5-1/4	65NB006052
7/8 x 5-1/4	65NB007052
7/8 x 6	65NB007060
1 x 5-1/4	65NB010052
1 x 6	65NB010060
1-1/8 x 6	65NB011060

Mechanical Tee Track Bolts & Hex Nuts

Size Run x Branch in	Bolt Size
2 x 1/2	3/8 x 2-1/2
2 x 3/4	3/8 x 2-1/2
2 x 1	3/8 x 2-1/2
2 x 1-1/4	3/8 x 2-1/2
2 x 1-1/2	3/8 x 2-1/2
2-1/2 x 1/2	1/2 x 3
2-1/2 x 3/4	1/2 x 3
2-1/2 x 1	1/2 x 3
2-1/2 x 1-1/4	1/2 x 3
2-1/2 x 1-1/2	1/2 x 3
3 x 1	1/2 x 3
3 x 1-1/4	1/2 x 3
3 x 1-1/2	1/2 x 3
3 x 2	1/2 x 3
4 x 1	1/2 x 3
4 x 1-1/4	1/2 x 3
4 x 1-1/2	1/2 x 3
4 x 2	1/2 x 3
4 x 2-1/2	1/2 x 3
4 x 3	1/2 x 3
5 x 1-1/4	1/2 x 3-3/4
5 x 1-1/2	1/2 x 3-3/4
5 x 2	5/8 x 4
5 x 2-1/2	5/8 x 4
5 x 3	5/8 x 4
6 x 1-1/4	1/2 x 3-3/4
6 x 1-1/2	1/2 x 3-3/4
6 x 2	5/8 x 4
6 x 2-1/2	5/8 x 4
6 x 3	5/8 x 4
6 x 4	5/8 x 4
8 x 2	5/8 x 4
8 x 2-1/2	5/8 x 4
8 x 3	5/8 x 4
8 x 4	5/8 x 4

NOTE: *Bolts and nuts are non-returnable.*

MasterSpec® for COOPLOK™ Grooved

COOPLOK™ Grooved Fittings and Couplings are now listed in the following sections of MasterSpec, the leading specification service for architects and engineers in the United States.

- 211100 Facility Fire-Suppression Water-Service Piping
- 211200 Fire Suppression Standpipes
- 211313 Wet-Pipe Sprinkler Systems
- 211316 Dry-Pipe Sprinkler Systems
- 212200 Clean-Agent Fire Extinguishing Systems
- 221113 Facility Water Distribution Piping
- 221116 Domestic Water Piping
- 221316 Sanitary Waste and Vent Piping
- 221413 Facility Storm Drainage Piping
- 232113 Hydronic Piping

Sections 21120, 211313, 211316 and 232113 have "enhanced" listings in MasterSpec. Additional information is available on the specification screen for each section that includes product details and links to the Smith-Cooper website.

UL Listed / FM Approved Sprinkler Pipe

SCI COOPLOK™ Grooved Couplings are UL Listed and FM Approved for use on the following types of sprinkler pipe:*

Pipe Name	Manufacturer
Dyna-Thread®, Central-Thread®, XL®, XL-II®, Dyna-Flow®, Super 40®, Super-Flo®, TL®, Central 7®, BLT®	Allied Tube and Conduit Corp.
Eddylite®, Eddy Flow®, Eddy Thread 40®	Bull Moose Tube Co.
Gal-7®	IDOD Systems Co.
EZ-Flow®	Northwest Pipe & Casing Co.
WLS®, Mega-Flow®, Mega-Thread®, MLT®, GL®	Wheatland Tube Company
Steady Flow®, Steady Thread®	Welded Tube Corp.
Fire-Flo®, EZ-Thread®	Youngstown Tube Co.
Tex-Flow®	Tex-Tube International
SPSF®	Yieh Phui Enterprise Co. Ltd.

***NOTE:** *Includes any manufacturer of Schedule 10 or Schedule 40 steel pipe. Check www.smithcooper.com for updated list of UL Listed/FM Approved sprinkler pipe manufacturers.*